W895A

Proportional Grade/Steering Controller

BLN-95-8973-2 **Issued**: April 1996

DESCRIPTION

The W895A Proportional Rotary Position Controller is used to provide grade or steering control of paving, trenching, curbing or similar construction machines. The Controller uses a follower to sense the grade level or steering direction from a stringline or other reference surface. When a grade or steering error is sensed, an electrical signal is provided to the servovalve, such as the KVF, to reposition the machine.



The W895A consists of a microsyn transducer and an amplifier in a single housing. Modular design with plug-in electrical interconnection allows easy component trouble-shooting or replacement.

The W895A may be used with either a right angle stringline follower or a straight tubular wand. The right angle follower is used for grade control with a stringline; when used with a firm surface, a skate and ski assembly is attached to a grid arm follower. The straight tubular wand is used for steering control.

FEATURES

- Easy to install
- Modular design with replacement modules
- Easy to service - single plug-in connector between modules
- May be mounted on either side of equipment
- Adjustable tracking force
- Rugged aluminum housing
- Operator can override with manual control
- Zero-center meter shows deviation from setpoint in RUN or STANDBY operation
- Shock and vibration resistant
- Reverse polarity and short circuit protection
- Moisture and corrosion resistant
- Adjustable sensitivity
- Dithered output

ORDERING INFORMATION

SPECIFY

1. Model Number W895A. See Table A.
2. Accessories
3. Spare Parts

TABLE A.

ORDER NUMBER	DESCRIPTION
W895A1038	12 Vdc, Drives KVF
W895A1053	Without Amp

ACCESSORIES

Order the necessary parts from the list below. See the following pages for part pictures.

1. KG07002 Steering Follower Wand
2. KG04003 Right Angle Grade Follower
3. K09274 Grid Arm
4. KG02001 Ski Runner (must be used with the KG06001 Skate Assembly)
5. KG06001 Skate Assembly (must be used with the K09274 Grid Arm)
6. KVF Servovalve
7. ACX104C Rotary Position Sensor
8. KW01013 Cable (two-foot coiled cable that extends to ten feet. Has right angle connector on one end and straight connector on the other. Mates with the ten-pin W895A Connector and an MS3102A18-1P plug (Part Number K03989)).
9. KW01017 Cable (two-foot coiled cable that extends to ten feet. Has straight connector on one end and spade lugs on the other. Mates with the ten-pin W895A Connector and a terminal strip.)
10. KW01001 Cable (two-foot coiled cable that extends to five feet. Has straight connector on one end and spade lugs on the other. Mates with the five-pin W895A Connector and a terminal strip)

© Danfoss, 2013-09

ORDERING INFORMATION *(continued)*

SPARE PARTS IDENTIFICATION

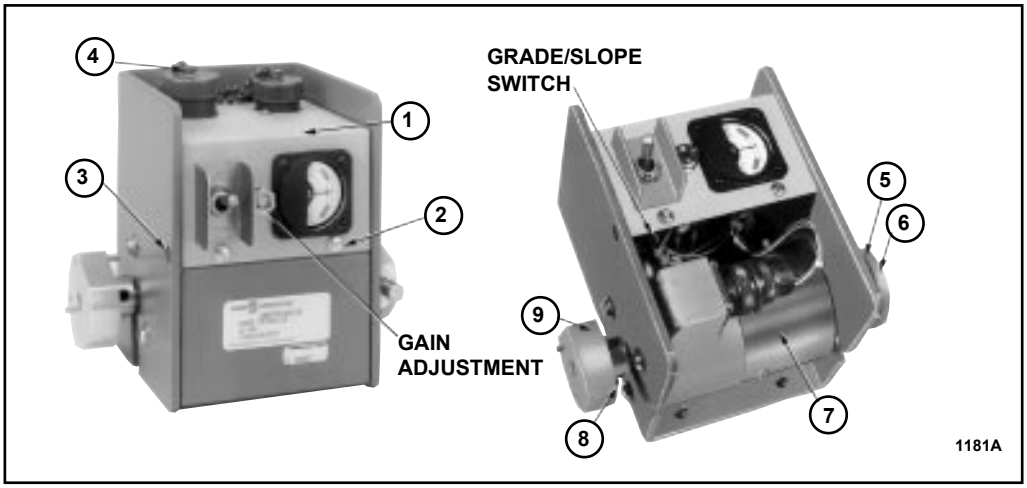

ITEM NUMBER	PART NUMBER	DESCRIPTION
1	K04463	Amplifier Module
2	†	Cover Screw (2) 8-32, 1/2 inch
3	†	Cover Retaining Bar Mounting Screw (2) Pan Head 8-32, 1/4 inch
4	†	Cap and Chain Mounting Screw (2) Round Head 6-32, 5/16 inch
5	K03368	Spring Bias Assembly
6	K04232	Hub Assembly With Channel
7	K04224	Transducer Including MS Connector
8	†	Stop Screw, Fillister Head 10-32, 1/2 inch
9	K04228	Hub Assembly With Stop Pins

† Standard hardware items. Obtain locally. Only those parts listed by Part Number should be ordered from Danfoss. Return the devices for repair if replacing individual parts is insufficient.

TECHNICAL DATA

ELECTRICAL

INPUT VOLTAGE
11 to 15 Vdc

RATED OUTPUT VOLTAGE
5.8 Vdc (12 Vdc input, 32 ohm, .5 henry load)

GAIN
(with six-inch right angle follower at 45° trailing angle)

1. At minimum gain (full counter-clockwise) no output voltage for any error input.
2. At maximum gain (full clockwise) .09 inches vertical deviation yields full drive current to the KVF Servovalve.

MECHANICAL

SHAFT ROTATION
± 20°

SHAFT TORQUE
6.0 inch-grams within 5° of null

NULL
Electrical null is located with the flat edge of the hub at 90 ± 5° from the back (mounting stud) side of the case.

ENVIRONMENTAL

TEMPERATURE RANGE
-40° to 77° C (-40° to 170° F) storage
0° to 77° C (32° to 170° F) operating

SHOCK
50 g for 11 milliseconds. Three shocks in both directions of the three mutually perpendicular axes for a total of 18 shocks.

TECHNICAL DATA *(continued)*

VIBRATION

Withstands a vibration test designed for mobile equipment controls consisting of two parts:

1. Cycling from 5 to 2000 Hz in each of the three axes.
2. Resonance dwell for one million cycles for each resonance point in each of the three axes.

Run from 1 g to 46 g's. Acceleration level varies with frequency.

HUMIDITY

After being placed in a controlled atmosphere of 95% humidity at 49° C (120° F) for 10 days, the sensor will perform within specification limits.

DUST

After being placed in a controlled atmosphere of dust simulating outdoor conditions for 24 hours, the W895A will perform within specification limits.

WEIGHT

3.2 kg (7 lbs.)

DIMENSIONS

See Dimension Drawing.

DIMENSIONS

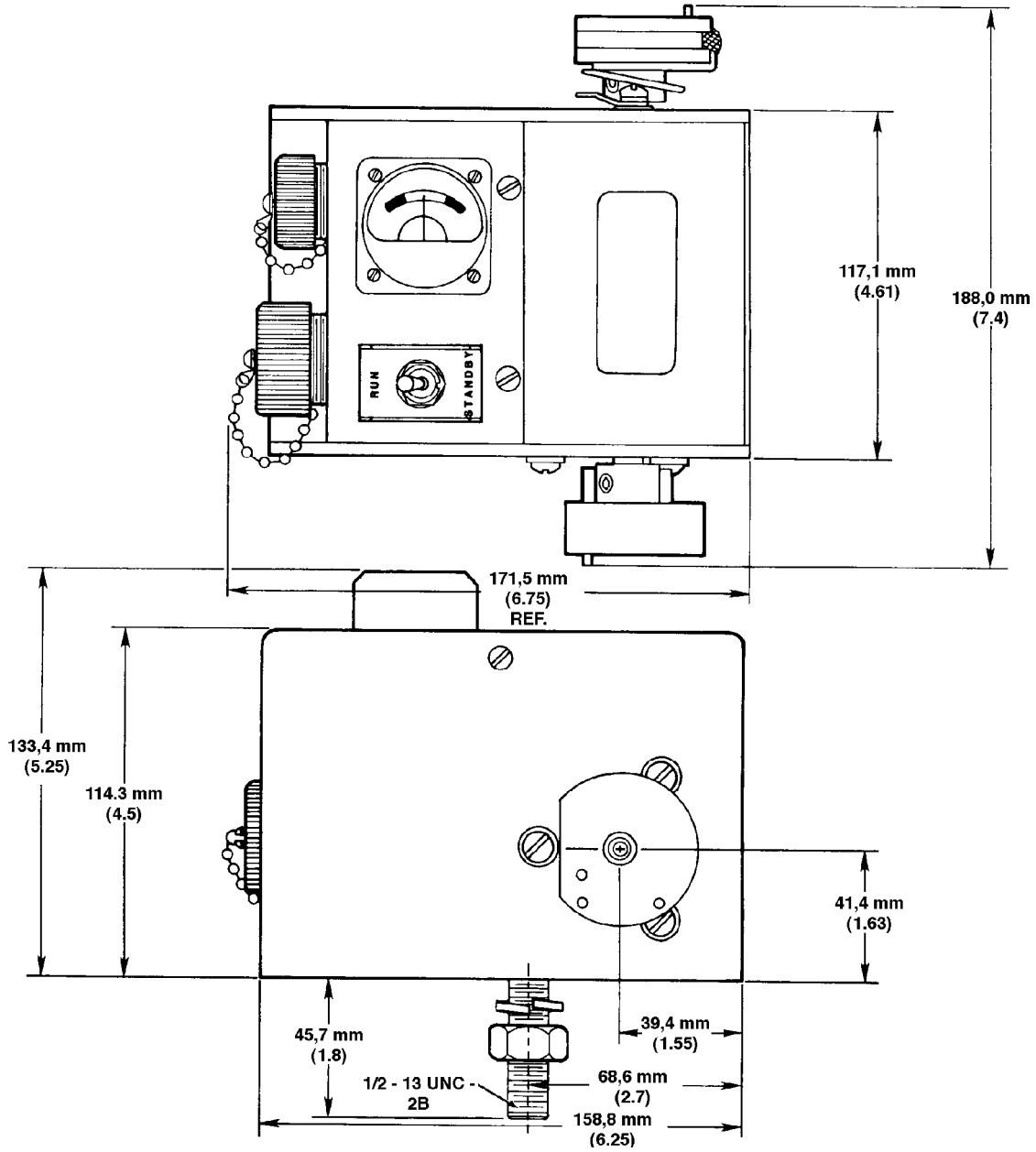

Dimensions of the W895A in Millimeters (Inches).

THEORY OF OPERATION

The amplifying section of the W895A supplies an excitation of 0.7 Vac (440 Hz square wave) across Pins A and B of the W895A's internal MS connector to the transducer. See the Block Diagram. As the command signal from the stringline or reference surface moves up/down (grade) or in/out (steering), the W895A's follower is moved, resulting in rotation of its shaft. As the rotor moves toward one secondary and away from the other, the voltage induced in the coil toward the rotor is increased, the opposite being true of the other secondary. At the full 20° of travel, the voltage across the secondary closer to the rotor is 2.3 Vac, while the other voltage is 1.7 Vac.

The ac signals from the secondaries are applied to two bridge rectifiers in the amplifying section, where each is converted to dc. At null the voltages across both capacitors are equal.

When a change in secondary voltage is introduced, the voltages across the capacitors are offset, inducing a differential between the reference and lead between the capacitors. This differential serves as the positive or negative correction signal that is amplified and then supplied to the servovalves to close the control loop. Control action drives the machine to a position such that the sensor error signal to the amplifying section is reduced to null.

CONNECTION DIAGRAM

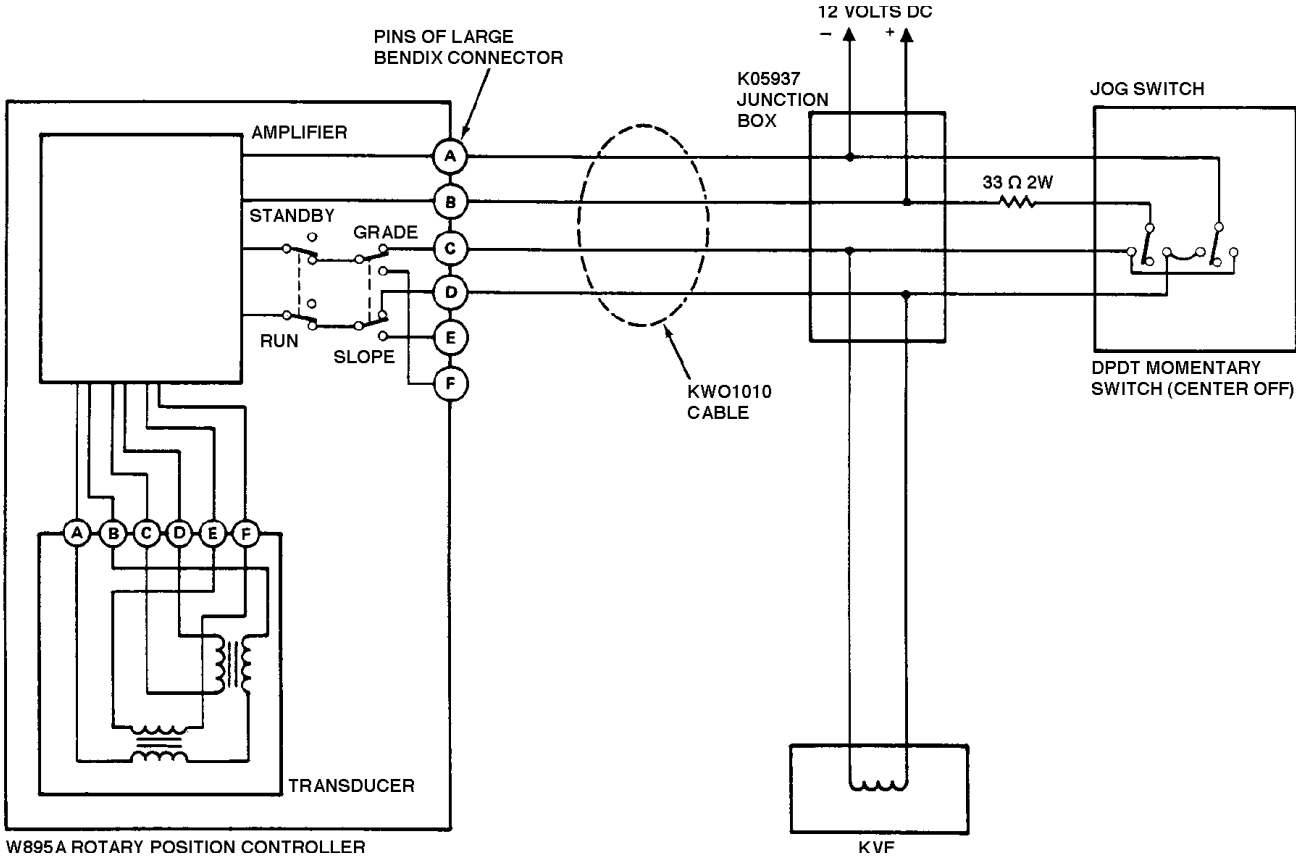

Typical Grade Hookup for the W895A Rotary Position Controller.

BLOCK DIAGRAM

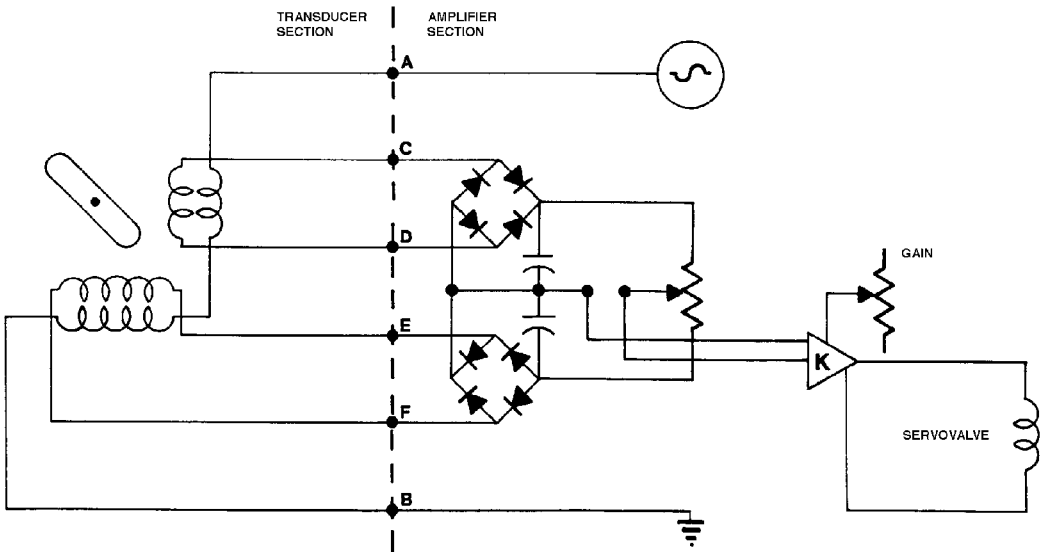

Schematic of the Transducer and Amplifier Sections of the W895A.

MOUNTING

The W895A can be mounted on either side of the machine and in any orientation, depending upon the location of the grade or steering reference. With the W895A at null and a follower equivalent to a six-inch radius arm attached to the sensor at a 45° angle down as referenced to the top surface of the sensor, the null touch point of the follower will be approximately 5.5 inches below the center line of the mounting bolt. Figure 1 illustrates the dimension. When the arm is at a 45° angle up, the touch point is approximately 3.25 inches above the mounting stud. The follower may also be attached so that it is parallel to the top surface of the W895A.

Once the mounting location is determined, drill a 14 mm (9/16-inch) clearance hole for the mounting bolt. Remove the nut and lockwasher from the mounting bolt through the clearance hole. Replace the lockwasher and nut and tighten the nut firmly.

NOTE: W895A must be mounted with connectors up.

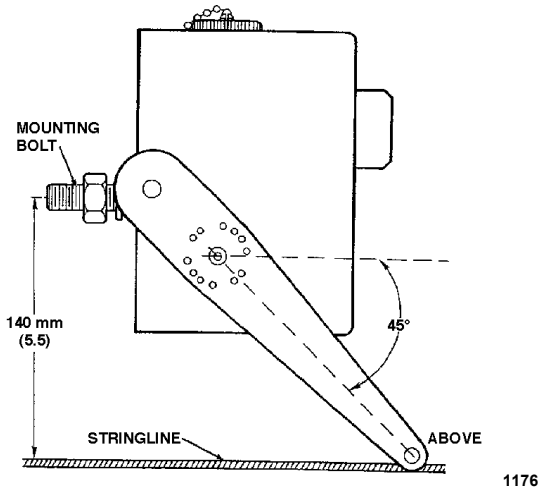

Figure 1. Relative Distance to Stringline.

The follower may be attached to either hub of the W895A. The KG04003 Right Angle Grade Follower adapts to almost any grade application. The attachment can follow a stringline at a 45° angle above or below the W895A, or it can follow the stringline horizontally. Figure 2 exhibits one possible way of attaching the Right Angle Grade Follower. Note the direction of travel for each.

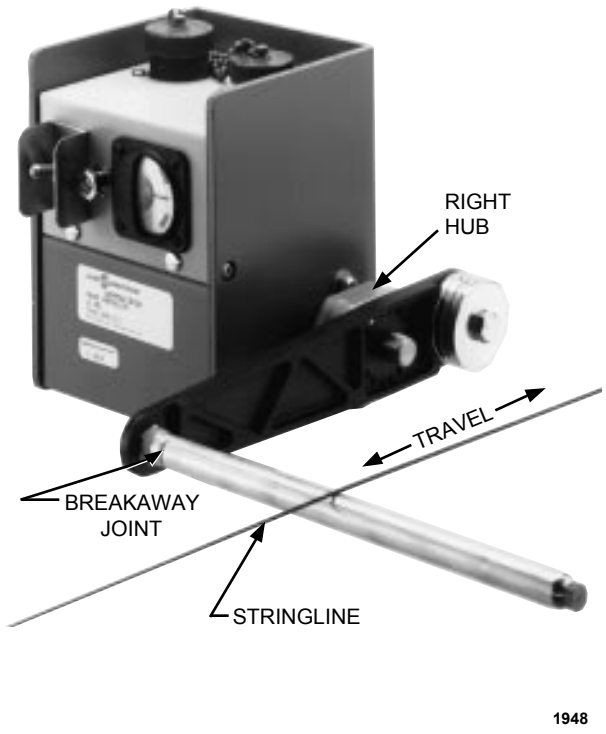

Figure 2. Right Angle Grade Follower at Horizontal Trailing or Leading.

MOUNTING *(continued)*

Guide holes on the KG07002 Steering Follower are identified in Figure 3. This follower may also be attached to either hub of the W895A. Unlike the Right Angle Grade Follower, it is mounted vertically for steering applications. See Figure 4.

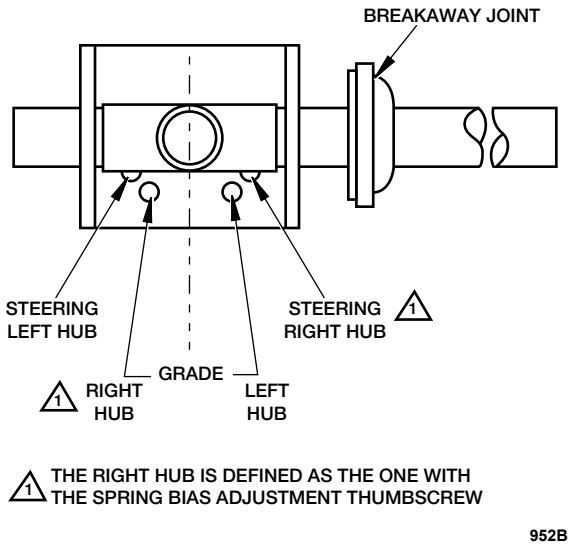

Figure 3. Guide Hole Identification for the KG07001 Steering Follower.

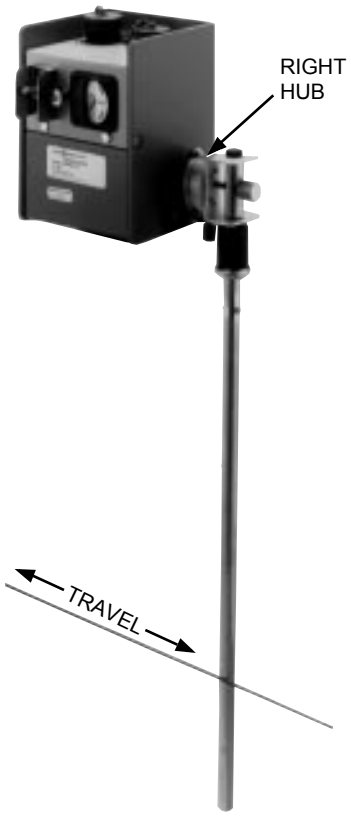

Figure 4. Typical Steering Application. Shaft of the W895A Must Run Parallel to the Stringline.

Other followers include a ski and skate that attach to the K09274 Grid Arm; Figure 5 shows the ski and a skate assembly. These followers are used to follow hard reference surfaces for grade applications. See the Ordering Information for Part Numbers.

After the follower has been installed, adjust the spring bias adjustment on the right hub so that the follower exerts a slight tension on the stringline at null. The bias setting controls both the left and right hub. Note that when the flat of the hub is parallel to the top surface of the case, the W895A is at null.



Figure 5. Skate and Ski Assembly.

WIRING

When used in grade applications, all wiring connections are made through the larger ten-pin MS connector on the top of the W895A. It mates with cable number KW01013 as shown in Connection Diagram. An MS3102A18-1P (Part Number K03989) connector mates at the other end of this cable to terminate at the junction board. Another cable, the KW01017, needs no MS connector interface.

If the steering controller is remote from the steering mechanism, electric sensing or steering post position is necessary. The smaller five-pin connector makes connection to the steering feedback transducer. The larger ten-pin connector is used for voltage input and servovalve connections. If the W895A is attached to the steering mechanism (mechanical feedback), only the ten-pin connector is used. A KW01001 cable mates with the five-pin connector and terminates in spade lugs at a junction board. The electrical feedback is provided by the ACX104C Potentiometer Transducer.

START-UP PROCEDURE

1. Place the RUN/STANDBY switch in the STANDBY position and energize the electrical system.

2. With the equipment at the correct grade or steering position, adjust the position of the W895A until the deviation meter nulls. Lock in position.

3. Adjust the gain potentiometer. Turn the gain potentiometer, located in the face of the W895A, fully clockwise. Place a nickel between the grade reference surface and the follower. Adjust the gain potentiometer until the deviation meter deflects to the red/white division. For some applications, it may be advantageous to increase or decrease the gain. Turning the adjustment screw clockwise will increase the gain, and vice-versa. If the system oscillates, the gain is too high. If the system is sluggish and slow to respond, the gain is too low.

TROUBLESHOOTING

When preliminary investigation of a system malfunction indicates trouble in the W895A, the following facts should be kept in mind to determine the specific malfunction:

1. The deviation meter will indicate deviations in grade or steering whenever power is supplied to the W895A, regardless of the RUN/STANDBY switch position.

2. In the RUN mode, the amplifier output is connected to the servovalve. In the STANDBY mode, the amplifier is not connected to the servovalve.

3. If the gain adjustment on the front panel is turned fully counter-clockwise (i.e., minimum gain), the position of the follower will not affect the amplifier or servovalve. The unit is effectively shut off.

4. Preliminary checks should include examination of the cables and leads for damaged or broken wires. Examine areas where shorting may occur, and check the power supply to be sure it is greater than 11 Vdc.

5. A SLOPE/GRADE switch located on the printed circuit board of the amplifier module must always be in the GRADE position if connector Pins C and D are the valve connections.

TROUBLESHOOTING PROCEDURE

1. With the W895A turned off, check to see if the meter operates as the follower is slightly raised or lowered. Raising or lowering the follower approximately the thickness of a nickel should deflect the indicator to the red/white division on the meter when the gain potentiometer is at full clockwise rotation.

2. If the meter operates correctly, check for power output at the servovalve with the RUN/STANDBY switch in RUN position. Raising or lowering the follower should cause a voltage change to about 6 volts before the follower reaches the stop.

3. If the meter of the W895A does not operate, recheck the cable for damage or breaks. Replace cables that show damage. Cables that have been badly pinched or kinked may have shorted or broken leads.

4. Check the power supply to be sure that voltage is more than 11 Vdc. If the voltage supply is adequate, check voltage at the W895A's larger connector between Pins A (-) and B (+) to be sure that cable wiring is not broken (see Pin Identification Drawing).

5. If power is available, unplug the large connector and check the meter by momentarily placing 12 Vdc across Pins C and D on the W895A's larger connector. The meter should deflect fully to one side. Reverse polarity and the meter should deflect to the other side. Be sure the RUN/STANDBY switch is in the RUN position. If the meter does not respond when 12 Vdc is applied to Pins C and D, apply 12 Vdc to Pins E and F. If the meter responds, the internal SLOPE/GRADE switch (see Spare Parts Identification Drawing) is in the SLOPE position and should be switched. If the meter does not operate, replace the amplifier.

TROUBLESHOOTING PROCEDURE *(continued)*

6. If power is available at the W895A and the meter operates correctly, remove the cover and check the wiring of the transducer (see Connection Diagram) for continuity. Remove the plug from the socket on the transducer so that the pins are accessible. A circuit should be complete between Pins A and B, C and D, and E and F on the transducer. There should be approximately 5 ohms between A and B, and 160 ohms between C and D or E and F (see Pin Identification Drawing). The circuit should be open between Pins A and F, A and D, and D and F, as well as between each pin and ground. If the transducer wiring has a short or break, the transducer should be replaced. If the transducer wiring is not shorted or broken and the W895A does not function, replace the amplifier.

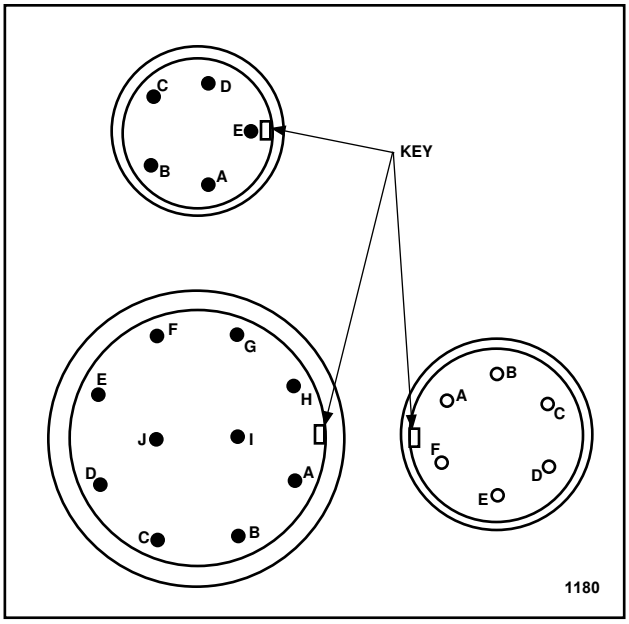

Pin Identification for Large Connector On Top of W895A (Ten-Pin), Small Connector On Top of W895A (Five-Pin) and Transducer Connector. The Socket Connector Leads are a Mirror Image of the Pin Identification (Lettered Counter-clockwise).

CUSTOMER SERVICE

NORTH AMERICA

ORDER FROM

Danfoss (US) Company
Customer Service Department
3500 Annapolis Lane North
Minneapolis, Minnesota 55447
Phone: (763) 509-2084
Fax: (763) 559-0108

DEVICE REPAIR

For devices in need of repair or evaluation, include a description of the problem and what work you believe needs to be done, along with your name, address and telephone number.

RETURN TO

Danfoss (US) Company
Return Goods Department
3500 Annapolis Lane North
Minneapolis, Minnesota 55447

EUROPE

ORDER FROM

Danfoss (Neumünster) GmbH & Co.
Order Entry Department
Krokamp 35
Postfach 2460
D-24531 Neumünster
Germany
Phone: 49-4321-8710
Fax: 49-4321-871-184