■ Assembly

■ Warnings

ESD Warning:

As the electronic components of the VLT are susceptible to Electronic Discharge - ESD - do NOT handle the VLT without wearing a ground-connected wristband!

General Warning:

NB!:
It is important to note that the serial number of the control card is placed on the back of the front cover. This means that if several VLTs are ordered it is important to keep the right parts together with reference to future ordering and warrenty .

Do not connect to mains before the VLT is completely mounted - this includes mounting of the front cover!

■ How to Assemble

The VLT 2800 consists of the following units:

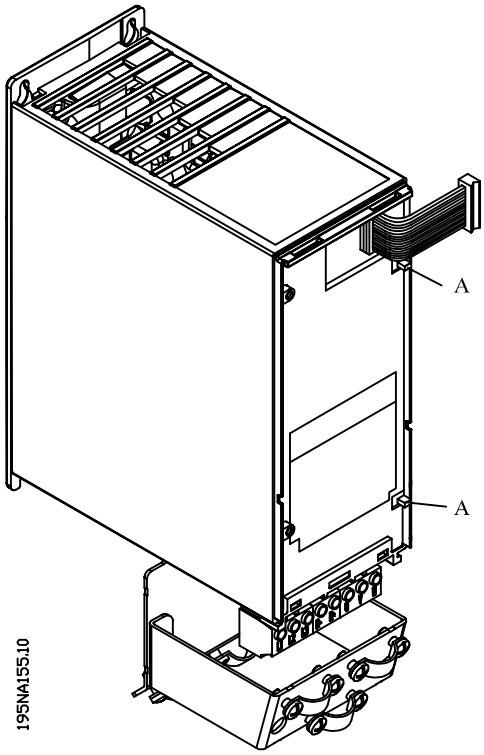

Fig. 1: Power unit for VLT 2800

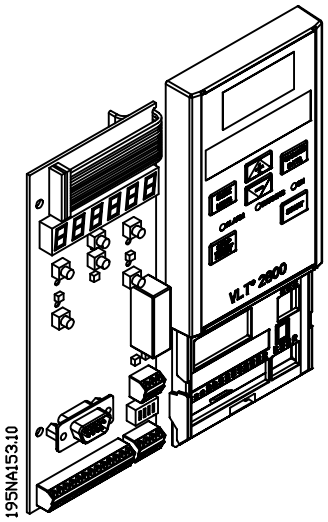

Fig. 2: Control card and front cover for VLT 2800

Before starting the assembly: Do not throw away the ESD shielding bag in which the control card is delivered as the bag will be needed for keeping the control card if replaced!

1. Place the control card on the power unit. Make sure that the right side of the control card is placed under the taps of the power unit
2. Fasten the two screws on the left side of the control card. Use the enclosed torx screw driver for this purpose
3. Connect the flat cable from the power unit to the control card. The plug is placed at the top left corner
4. Place the front cover on top of the assembled control card and power unit
5. Now it is important to initialize the VLT in order for it to function correctly. Please follow the instructions below

NB!:
Manual initialisation is not possible on the LCP 175N0131 control unit. It is, however, possible to perform an initialisation via parameter 620 *Operation Mode*

Manual initialisation can be performed in two ways: either

1. Cut mains
2. Press [QUICK MENU] + [+] + [CHANGE DATA] and reconnect mains simultaneously
3. Release the keys

or

1. Select parameter 620 *Operation Mode*
2. Select data value [3] (Initialize)
3. Cut mains

The frequency converter has now been programmed for factory setting. The following parameters are not reset during manual initialisation:

- Par. 600 *Operating hours*
- Par. 601 *Hours run*
- Par. 602 *kWh counter*
- Par. 603 *Number of power-ups*
- Par. 604 *Number of overtemperatures*
- Par. 605 *Number of overvoltages*

■ Future Ordering

For future ordering it is necessary to state the order number for the power unit as well as the control unit. The power unit order number is placed on top of the power unit, whereas the control unit order number is placed on the *back* of the front cover

■ Disassembly

Warning:

It can be extremely dangerous to touch the electrical parts even when the mains supply has been disconnected. Also ensure that other voltage inputs are disconnected from load sharing, for example (sharing of DC intermediate circuit).

For VLT 2800: wait at least 4 minutes.

195NA139.10

■ How to Disassemble

To disassemble the VLT, use a screw driver 1 x 6mm (size 4).

1. Remove the front cover by using the screw driver, see figure 3
2. Lift the flat cable using the screw driver. Be careful not to touch the components on the control card. See figure 4 for instructions
3. Remove the screws on the left side of the control card
4. Gently remove the control card
5. Keep the control card in the ESD shielding bag in which it was delivered

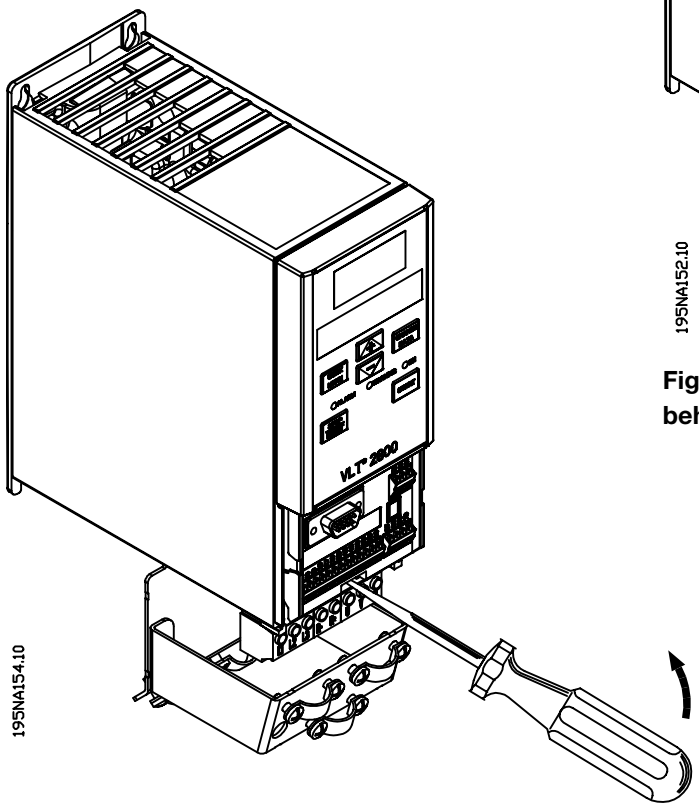

Fig. 3: Moving the front cover with a screw driver

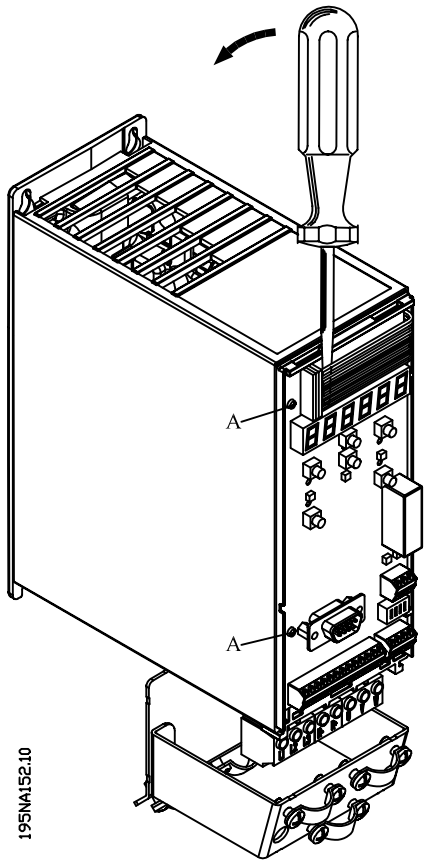

Fig. 4: To remove flat cable, place screw driver behind cable and pull gently