ENGINEERING
TOMORROW

Operating Guide

Active Power Filter





drives.danfoss.com |

Contents

1 Introduction

1.1 Purpose of the Operating Guide 5
1.2 Additional Resources 5
1.3 Intended Use 5
1.4 Version History 5

2 Safety

2.1 Target Group and Necessary Qualifications 7
2.2 Safety Symbols 7
2.3 General Safety Precautions 8
2.4 Electrical Installation Precautions 9
2.5 Safe Operation 10

3 Approvals and Certifications

3.1 Product Approvals and Certifications 11

4 Product Overview

4.1 Product Introduction 12
4.2 Active Power Filter System Cabinet 13
4.3 HMI Display 14
4.4 Active Power Filter Module 19
4.5 Product Category 20

5 Product Specifications

5.1 Electrical Specification 21
5.2 Cable Specification 22
5.3 Control Specification 23
5.4 Physical Specification 23
5.5 Ambient Conditions 23
5.6 HMI Display Element Specification 25

6 Mechanical Installation Considerations

6.1 Pre-Installation 29

6.1.1 Planning the Installation Site 29
6.1.2 Receiving the Unit 29
6.1.2.1 Exterior and Interior Inspection 29
6.1.3 Accessories 29
6.1.4 Storage Before Installation 30
6.1.5 Mechanical Dimensions 31
6.2 Mechanical installation 36
6.2.1 Safety Precautions 36
6.2.2 Required Tools 36
6.2.3 Installation Environment Requirements 37
6.2.4 Clearance Requirements 37
6.2.5 Active Power Filter Module Indicators 39
6.2.6 Stacking Active Power Filter Modules 40

7 **Electrical installation Considerations**

7.1 Input Voltage and Frequency Range 46
7.2 Short-circuit Protection 46
7.3 Inrush Voltage Protection 47
7.4 Load Current Detection for CT Installation and Wiring 47

8 **Electrical installation**

8.1 Wiring the Active Power Filter Module 49
8.2 Wiring the System Cabinet 51
8.3 Wiring Basic CT and Installation 53

9 **Basic Operations and Applications**

9.1 Inspection Before Start-up 55
9.2 DIP Switch Settings 55
9.3 Start-up Procedure 57
9.4 Display Settings 57
9.4.1 Display User Level 57
9.4.2 7" HMI Display Functions 58
9.4.3 10" HMI Display Functions 60

10 **Troubleshooting**

10.1 Service and Maintenance 62

10.2 Fault Finding and Troubleshooting 62
10.3 Disposal 62

1 Introduction

1.1 Purpose of the Operating Guide

This operating guide provides information for safe installation and commissioning of the filter. The operating guide is intended for use by qualified personnel only. To ensure proper use of the filter, read and follow the operating guide, and pay particular attention to the safety instructions and general warnings. Always keep this operating guide available with the filter.

1.2 Additional Resources

Additional resources are available to help understand the features, and safely install and operate the Danfoss Active Power Filter.

- The latest version of product documentation and other supplementary publications, drawings, and guides are available at www.danfoss.com.

1.3 Intended Use

The Danfoss Active Power Filter is used for harmonic current mitigation and reactive current compensation, and for mains voltage balancing. The unit can be integrated in various systems and applications as a centrally installed filter, or it can be combined with a VLT®, VACON®, or iC7 drive as a packaged low-harmonic drive solution.

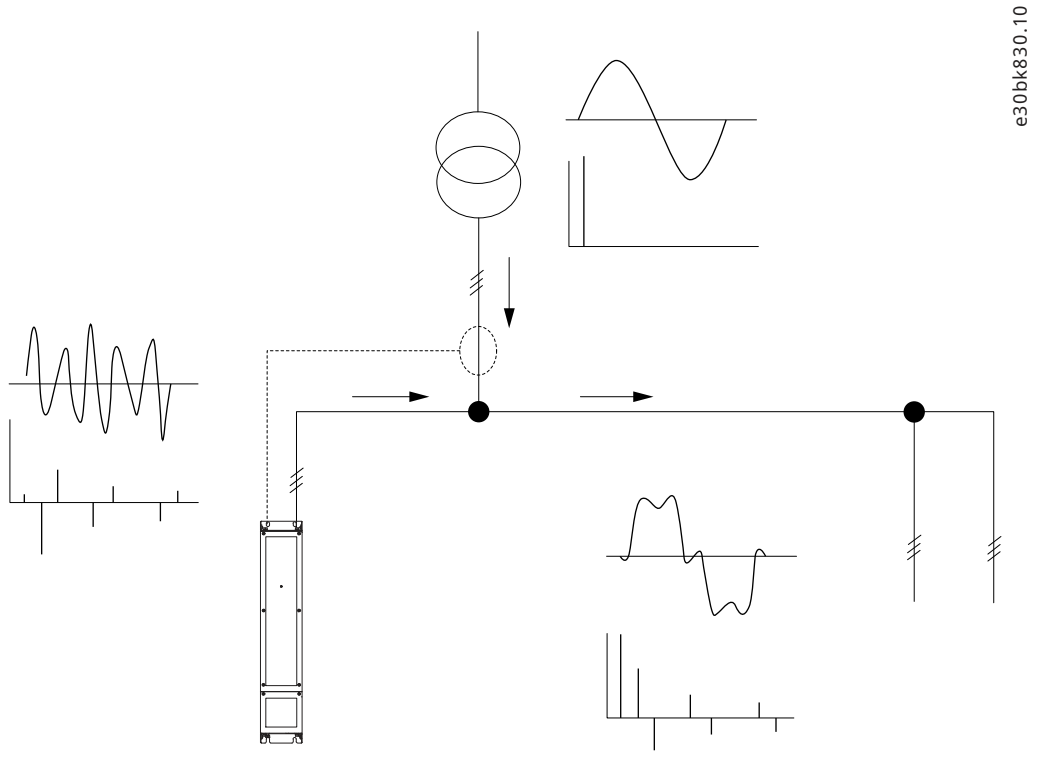

Figure 1: Active Filter Principles

1.4 Version History

This guide is regularly reviewed and updated. All suggestions for improvement are welcome.

The original language of this guide is English.

Table 1: Version History

Version	Remarks
AQ467435236403, version 0101	First release

2 Safety

2.1 Target Group and Necessary Qualifications

Correct and reliable transport, storage, installation, operation, and maintenance are required for the trouble-free and safe operation of the filter. Only **skilled personnel** are allowed to perform all related activities for these tasks. Skilled personnel are defined as properly trained staff, who are familiar with and authorized to install, commission, and maintain equipment, systems, and circuits in accordance with pertinent laws and regulations. Also, the skilled personnel must be familiar with the instructions and safety measures described in this manual and the other product-specific manuals. Non-skilled electricians are not allowed to perform any electrical installation and troubleshooting activities.

2.2 Safety Symbols

The following symbols are used in Danfoss documentation.

⚠ DANGER

Indicates a hazardous situation which, if not avoided, will result in death or serious injury.

⚠ WARNING

Indicates a hazardous situation which, if not avoided, could result in death or serious injury.

⚠ CAUTION

Indicates a hazardous situation which, if not avoided, could result in minor or moderate injury.

NOTICE

Indicates information considered important, but not hazard-related (for example, messages relating to property damage).

The guide also includes ISO warning symbols related to hot surfaces and burn hazard, high voltage and electrical shock, and referring to the instructions.

	ISO warning symbol for hot surfaces and burn hazard
	ISO warning symbol for high voltage and electrical shock
	ISO action symbol for referring to the instructions

2.3 General Safety Precautions

⚠ WARNING

LACK OF SAFETY AWARENESS

This guide provides important information on preventing injury and damage to the equipment or the system during installation and maintenance. Ignoring this information can lead to death, serious injury, or severe damage to the equipment.

- Only skilled personnel must perform installation, start-up, and maintenance.
- Make sure to fully understand the dangers and safety measures present in the application.
- Before performing any electrical work on the filter, lock out and tag out all power sources to the filter.
- Disconnect all power sources. Measure the power source level to verify they are de-energized. Ensure that the filter cannot re-energize.
- Wait for capacitors to discharge fully. The discharge time is shown on the exterior of the filter. Measure the voltage level to verify full discharge.

⚠ WARNING

ELECTROMAGNETIC INTERFERENCE

AC drives and filters may produce electromagnetic interference up to 300 GHz that may affect the functionality of pacemakers and other implanted medical devices.

⚠ WARNING

HAZARDOUS VOLTAGE

Filters contain hazardous voltage when connected to the AC mains. Failure to perform installation, start-up, and maintenance by skilled personnel can result in death or serious injury.

⚠ WARNING

DISCHARGE TIME

The filter contains DC-link capacitors, which can remain charged even when the filter is not powered. High voltage can be present even when the warning indicator lights are off. Failure to wait the specified time after power has been removed before performing service or repair work can result in death or serious injury.

- Disconnect all power sources.
- Wait for capacitors to discharge fully. The discharge time is shown on the exterior of the filter.
- Measure the voltage level to verify full discharge.

⚠ WARNING

AUTOMATIC START

When the filter is connected to the AC mains, it will automatically start operation, causing risk of death, serious injury, and equipment or property damage.

- Ensure that all covers are mounted before applying mains to the filter.
- Ensure that current transducers are mounted correctly to avoid incorrect operation.
- Disable automatic connect via PC SW, if automatic start-up should be prevented.
- Disconnect the filter from mains whenever safety considerations make it necessary to avoid unintended start of the unit.
- To avoid automatic start of the filter, bridge the EPO contacts. Reset of the unit is required after opening the EPO contact.

⚠ WARNING

LIFTING HEAVY LOAD

Not following the safe lifting instructions can result in death or serious injury.

- Do not walk under suspended loads. Use lifting devices that are appropriate for the weight of the unit. Use the recommended lifting method.

⚠ CAUTION

INTERNAL FAILURE HAZARD

An internal failure in the filter can result in serious injury when the filter is not properly closed.

- Ensure that all safety covers are in place and securely fastened before applying power.

⚠ CAUTION

RISK OF FIRE

Installation of the filter in areas that are exposed to excess moisture, heat, dust, flammable gas, or explosives can result in fire or electrical shock accidents.

- Keep the filter clear of excess moisture, heat, dust, flammable and explosive materials.
- Install the filter in a well ventilated indoor area free of conductive contaminants.

2.4 Electrical Installation Precautions

Precautions to observe before doing electrical installation of a filter.

⚠ WARNING



ELECTRICAL SHOCK HAZARD - HIGH LEAKAGE CURRENT

Leakage currents exceed 3.5 mA. Failure to connect the filter properly to protective earth may result in death or serious injury.

- Ensure reinforced protective earthing conductor according to IEC 60364-5-54 cl. 543.7 or according to local safety regulations for high touch current equipment. The reinforced protective earthing of the drive can be done with:
- PE conductor with a cross-section of at least 10 mm^2 Cu or 16 mm^2 Al, or an additional PE conductor of the same cross-sectional area as the original PE conductor as specified by IEC 60364-5-54, with a minimum cross-sectional area of 2.5 mm^2 (mechanically protected) or 4 mm^2 (not mechanically protected).
- PE conductor completely enclosed within an enclosure or otherwise protected throughout its length against mechanical damage.
- PE conductor that is part of a multi-conductor power cable with a minimum PE conductor cross-section of 2.5 mm^2 (permanently connected or plugged in by an industrial connector). The multi-conductor power cable must be installed with an appropriate strain relief.

⚠ WARNING



ELECTRICAL SHOCK HAZARD

Failure to connect the filter properly.

- Fasten the CT wiring properly to avoid open circuit

2.5 Safe Operation

When operating the unit, refer to the operating guide for guidance and all applicable safety instructions.

- The filter is not suitable as the only safety device in the system. Make sure that additional monitoring and protection devices on drives, motors, and accessories are installed according to the regional safety guidelines and accident prevention regulations.
- Keep all doors, covers, and terminal boxes closed and securely fastened during operation.

3 Approvals and Certifications

3.1 Product Approvals and Certifications

The Danfoss Active Power Filter complies with the required standards and directives. For detailed information on approvals and certification for a specific product, see the nameplate or visit www.danfoss.com.

Table 2: EU Directives Applicable to Active Filters

EU directive	Description
Low Voltage Directive (2014/35/EU)	The aim of the Low Voltage Directive is to protect persons, domestic animals, and property against dangers caused by the electrical equipment, when operating electrical equipment that is installed and maintained correctly in its intended application. The directive applies to all electrical equipment in the 50–1000 V AC and the 75–1500 V DC voltage ranges. EN 62477-1:2012/A1:2017 Safety requirements for power electronic converter systems and equipment - Part 1: General.
EMC Directive (2014/30/EU)	The purpose of the EMC (electromagnetic compatibility) Directive is to reduce electromagnetic interference and enhance immunity of electrical equipment and installations. The basic protection requirement of the EMC Directive states that devices that generate electromagnetic interference (EMI), or whose operation could be affected by EMI, must be designed to limit the generation of electromagnetic interference and shall have a suitable degree of immunity to EMI when properly installed, maintained, and used as intended. Electrical equipment devices used alone or as part of a system must bear the CE mark. Systems do not require the CE mark, but must comply with the basic protection requirements of the EMC Directive. EN IEC 61000-6-2:2019-11 Electromagnetic compatibility (EMC) - Part 6-2: Generic standards - Immunity standard for industrial environments. EN IEC 61000-6-4:2000-09 Electromagnetic compatibility (EMC) Part 6-4: Generic standards - Emission standard for industrial environments.

4 Product Overview

4.1 Product Introduction

The Danfoss Active Power Filter is a harmonic compensator for the 3-phase power grid, applied to the harmonic control of the power grid.

Since the Active Power Filter is used for harmonic compensation of the power grid. The capacity selection of the Active Power Filter must be a subject to harmonic content to avoid poor compensation due to insufficient capacity.

The thermal loss of the Active Power Filter is not bigger than 3% of the rated apparent power. Rated Active Power Filter power is Vphase*Irated*3 or Vline*Irated*sqrt (3).

Key features of the Danfoss Active Power Filter:

- Compensates 2nd ~ 50th harmonic currents (selectable).
- Compensates both inductive and capacitive reactive power.
- Correct 3-phase load imbalance.
- Rapid dynamic responses, stable parameters, and good harmonic compensation results.
- The advanced ECO mode ensures high efficiency and low energy loss.
- The modular design allows freely to select different modules for the harmonic power compensation for different capacities.
- The system adopts an advanced 3-level structure and consists of digital signal processors (DSP), Field Programmable Gate Array (FPGA), and high power electronic devices.
- Supports remote on/off and fault monitoring via output relays and supports Modbus RTU/ TCP for remote SCADA monitoring.

Refer to Figure 2 for an overview of the Active Power Filter system.

The Danfoss Active Power Filter system consists of multiple Active Power Filter modules and one system cabinet. Load current is detected by external CT and load harmonics current is calculated by the Active Power Filter controller. Based on the load current feedback, the controller manages power circuit to output inverse harmonics compensation current to cancel load harmonics current. The system cabinet is equipped with an HMI Display that shows the information of individual modules and control the operation of individual modules. All power modules are connected in parallel and work independently.

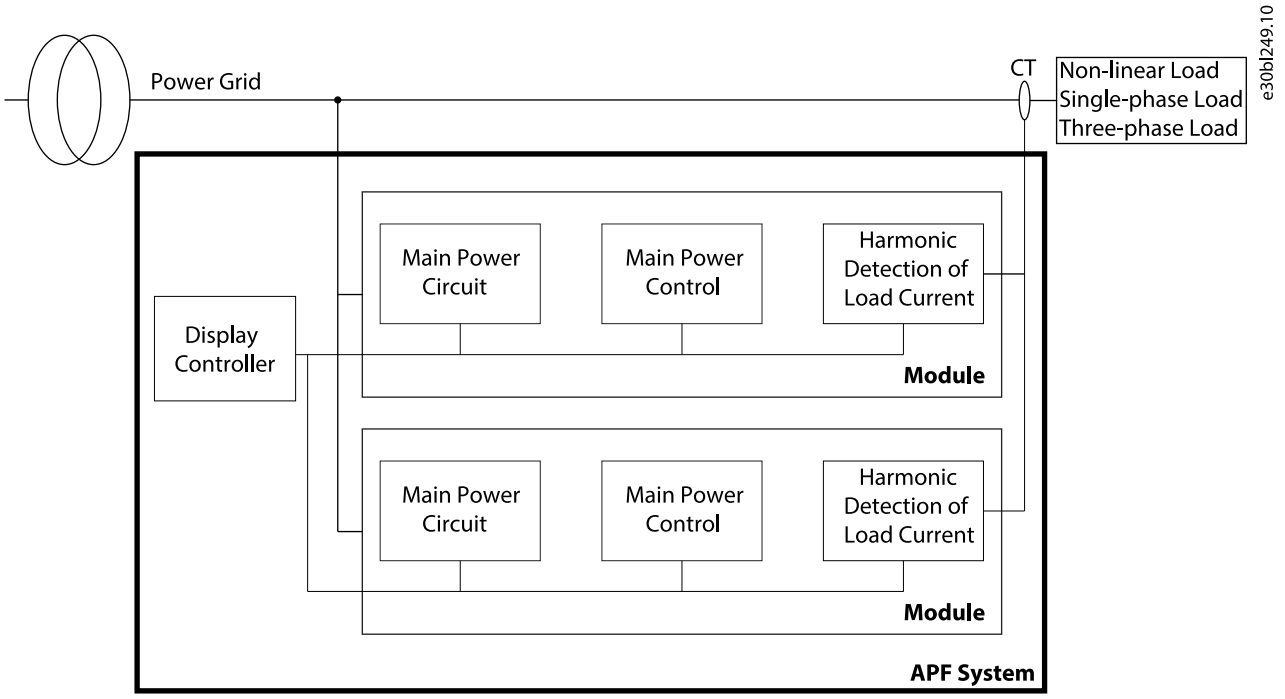

Figure 2: Active Power Filter System Block Diagram

- Multifunction: The Active Power Filter is the solution to harmonics, inductive and capacitive reactive power, and phase unbalance problems in a 2-phase system.
- Superior harmonics compensation performance: The efficiency of harmonic compensation is up to 98%.
- Excellent reactive power compensation: The active filter is capable of rapid (ms grade), precise (-0.99<PF<0.99) and bi-directional (capacitive and inductive) reactive compensation.
- Overtemperature mechanism: Is applied on key components, such as IGBT and inductor.
- Sound stability: The Active Power Filter acts as an infinite impedance to the power grid system and has no negative effect on the power system. It is able to output accurate compensation current, which has no negative effect on other equipment.
- Low power loss: The Active Power Filter supports ECO mode to save energy.
- Flexible applications: Modules can be embedded into standard or customized cabinets that meet the size requirements.
- Wide capacity coverage: The capacity of a single cabinet is based on the quantity of module installed. There is no restriction in terms of system cabinets connected in parallel.
- User-friendly Mandarin/English interface: Parameters setting for:
  - Event log.
  - Automatic error alarm.
  - Error record.
- Complete function setup: Automatic start-up for the self-inspection function. The soft start time can be set up and the nominal output can be limited.

4.2 Active Power Filter System Cabinet

The Danfoss Active Power Filter module and the HMI Display can be installed inside a standard or customized cabinet that meets the size requirements. Refer Figure 3 to for an example of the Active Power Filter system cabinet (IP30).

Refer to Figure 3 for the inlet/outlet airflow for the Active Power Filter system cabinet.

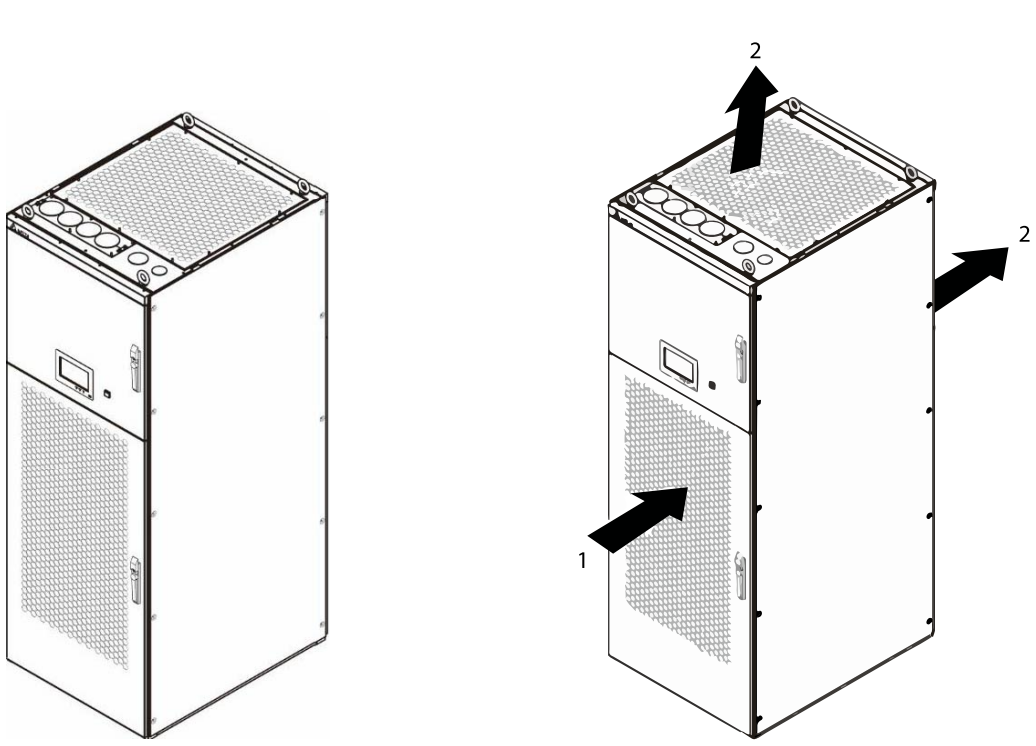

Figure 3: Active Power Filter System Cabinet and Airflow

1	Inlet	**2**	Outlet

The capacity and quantity of Active Power Filter modules installed in the system, determines the system capacity. It is possible to select modules of different quantity and capacity combination and the system cabinet, based on their requirements. Contact a Danfoss representative for more information.

4.3 HMI Display

Two kinds of HMI displays are available for the Danfoss Active Power Filter.

- 7'' HMI touchscreen display, refer to Figure 4, Figure 5.
- 10'' HMI touchscreen display, refer to Figure 6, Figure 7.

The HMI display connects with the Active Power Filter module via an internal connection port and is capable of monitoring module operations and configuring parameters. The HMI display adopts the embedded design and is suitable for various kinds of cabinets.

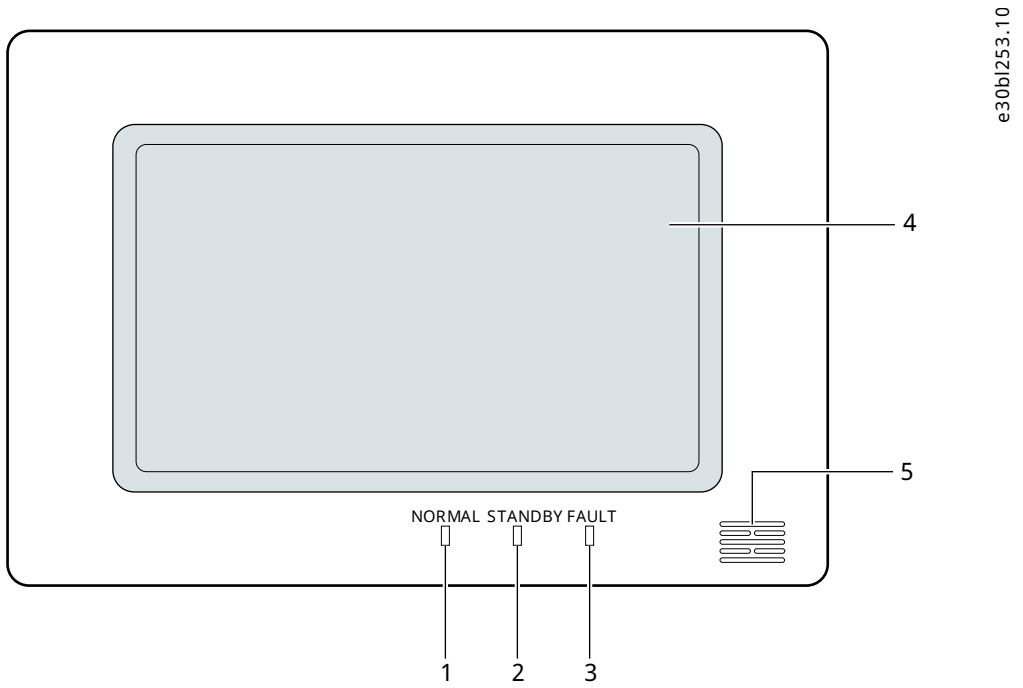

Figure 4: 7" HMI Touchscreen (Front)

Table 3: HMI-F Touchscreen Status Indicators

Position number	Item	Description
1	Normal (Green)	When the indicator light is on, the Active Power Filter operates normally.
2	Standby (Yellow)	When the indicator light is on, the Active Power Filter is in standby mode.
3	Fault (Red)	When the indicator light is on, the Active Power Filter is malfunctioning
4	Touchscreen	Operate the device through the touch-screen.
5	Buzzer	Alarm sounding to warn user.

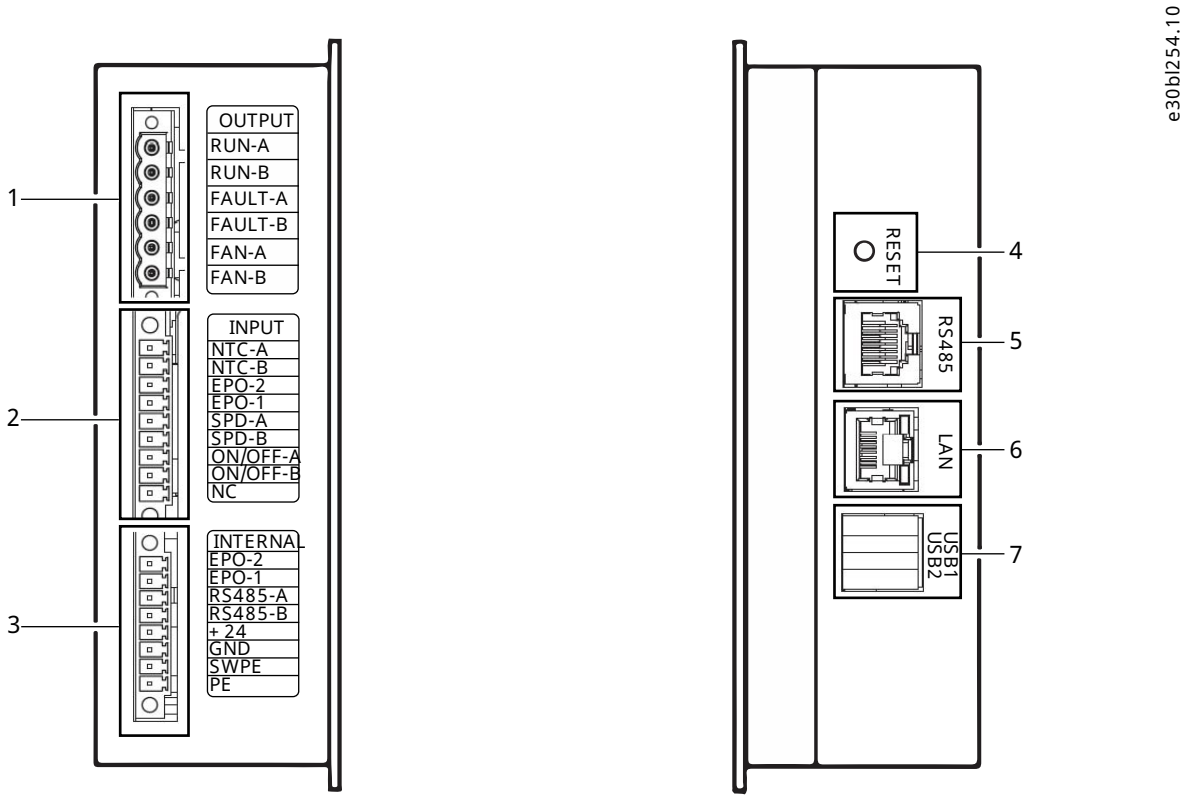

Figure 5: HMI-F Left and Right Side

For 7" HMI display element specification, refer to 7" HMI Display.

Table 4: Elements on Left and Right Side of the 7" Touchscreen

Position number	Item	Description
1	Output signal	Output signals of system operation and other status.
2	Input signal	Input signals of system temperature, EPO, and other signals.
3	MODBUS	Communication port between the HMI and the module.
4	RESET	Reset button for the HMI.
5	RS485	Standard RS485 protocol for the communication with the master computer.
6	LAN	Standard Ethernet port for the communication with the master computer.
7	USB	USB communication port.

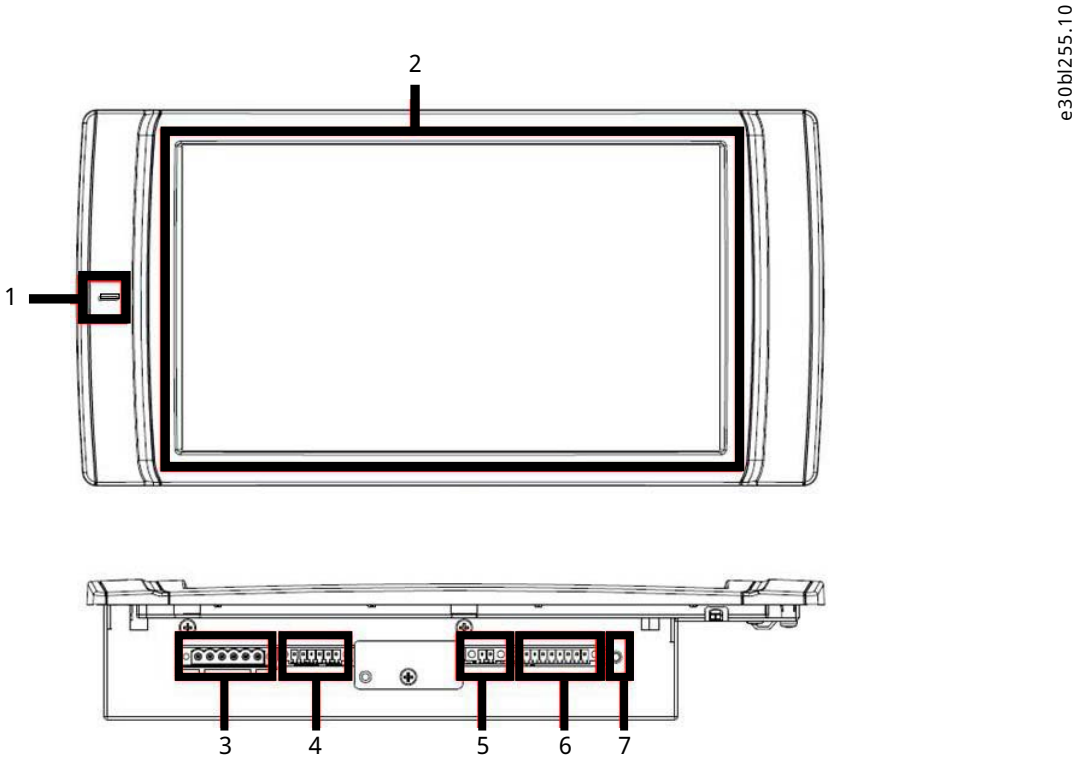

Figure 6: 10" HMI Touchscreen (Front/Bottom)

Table 5: HMI-10 Touchscreen Status Indicators and Elements

Position number	Item	Description
1	Touchscreen	Operate the device through the touchscreen.
2	Tri-color LED (Normal Green)	When the indicator light is on, the device operates normally.
	Tri-color LED (Standby Yellow)	When the yellow indicator light is on, the device is in standby mode.
	Tri-color LED (Fault Red)	When the red indicator light is on, the device is malfunctioning.
	Tri-color LED (Yellow/red flash alternately)	• (Single module connected) The device is malfunctioning and in standby mode. • Some devices are malfunctioning and others are in standby mode.
	Tri-color LED (Green/yellow flash alternately)	Multiple modules connected. Some devices are operating and others are in standby mode.
	Tri-color LED (Green/red flash alternately)	Some devices are operating and others are malfunctioning.
	Tri-color LED (Green/yellow/red flash alternately)	Device is upgrading.
3	Output (Dry contacts)	Output dry contact signals of system operation and other status.
4	Input (Wet contacts)	Inputs wet contact signals of system temperature, EPO, and other signals.
5	SYN-PWM (Synchronizing Signal Output Terminals)	Synchronizing signals.
6	Internal (MODBUS)	Communication port between the HMI and the module.
7	Reset	Reset button for the HMI.

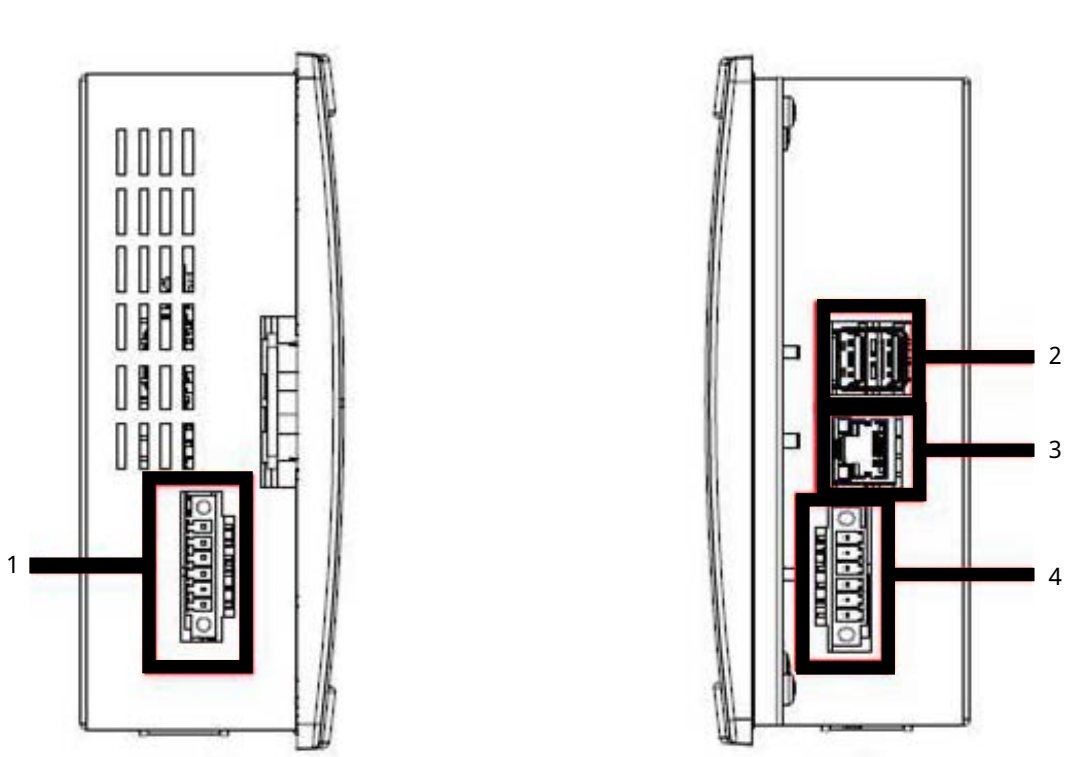

Figure 7: HMI-F10 Left and Right Side

For 10" HMI display element specification, refer to 10" HMI Display.

Table 6: Elements on Left and Right Side of the 10" Touchscreen

Position number	Item	Description
1	RTU communication port	RS485 communication ports.
2	USB	USB expanding ports.
3	LAN	Standard Ethernet port that fosters the communication with the master computer.
4	External communication terminals	For the external RS485, RS232 signals, and communication with the master computer.

4.4 Active Power Filter Module

The Danfoss Active Power Filter module is available in 2 different wiring systems and is available in various output currents. Refer to 4.5 Product Category for an overview of the Active Power Filter model types, output currents, and wiring systems.

The 3P4W module must be connected to a neutral line, which improves its ability of compensating the zero sequence current. The 3P3W model is not required to connect to the neutral line, as a result, it is not able to compensate the zero sequence current.

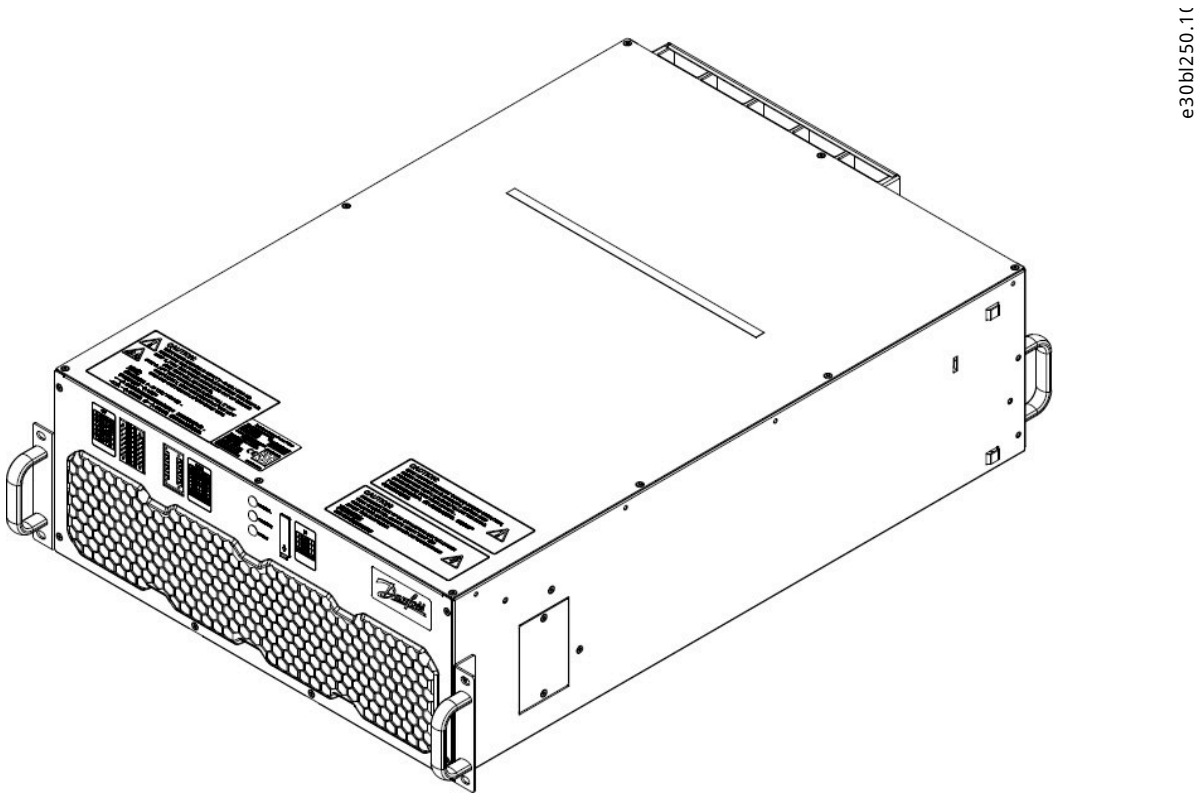

Figure 8: Active Power Filter Module

4.5 Product Category

The Danfoss Active Power Filter is categorized by the capacity and wiring system. Table 7lists the information regarding the Active Power Filter module products.

Table 7: Active Power Filter Module Products

Product	Model	Output Current [A]	Wiring System
Active Power Filter Module	APF-380-30-FM4	30	3P4W
	APF-380-30-FM3	30	3P3W
	APF-380-50-FM4	50	3P4W
	APF-380-50-FM3	50	3P3W
	APF-380-75-FM4	75	3P4W
	APF-380-75-FM3	75	3P3W
	APF-380-100-FM4	100	3P4W
	APF-380-100-FM3	100	3P3W
	APF-380-150-FM4	150	3P4W
	APF-380-150-FM3	150	3P3W
HMI Display	APF-HMI-F (7")	N/A	N/A
	APF-HMI-F10 (10")	N/A	N/A

5 Product Specifications

5.1 Electrical Specification

Table 8: Electrical Specification

Functions	Description				
Rated voltage	AC 400 V				
Input voltage range	AC228 ~ 456 V			AC228 ~ 480 V	
Electric connection	3P4W			3P3W	
Rated frequency	50 (60) Hz ± 10%				
Input voltage THD range	≤ 15%				
Rated capacity per module	30 A	50 A	75 A	100 A	150 A
Rated capacity per cabinet	100 A		150 A	200 A	300 A
Rated current per cabinet	30 ~ 750 A (module combination).				
Redundancy	Each module is an independent filtering system.				
Harmonic mitigation capability	2nd ~ 50th order (Individually configurable).				
Individual harmonic filtering capabilities	0% ~ 100% programmable per harmonic in Ampere value.				
Harmonic filtering performance	Filter up to 98% harmonics at rated load, THDv < 3%, THDi < 5% after filtering. Precondition: The grid background THDv must be less than 1% under no-load condition.				
Reactive power compensation capability	Both inductive and capacitive reactive power.				
Reactive Power compensation performance	Cosφ ≥ 0.99 after compensation. Only if the Active Power Filter capacity is sufficient.				
Full response time	<10 ms				
Instant response time	<100 ms				
Thermal loss	≤ 3% of Active Power Filter rated capacity.				
Output current limitation	Automatic. 100% rated capacity.				

Table 8: Electrical Specification *(continued)*

Functions	Description
Parallel Expansion (System)	7 modules per cabinet. Up to 10 cabinets.
MTBF	Up to 120000 hours. Precondition: The system is operating as per the specified conditions.

5.2 Cable Specification

Temperature endurance for wires must be 70 °C (158 °F).

If the neutral line current of the Active Power Filter is larger than the phase line current, the neutral line must have a larger diameter. Contact Danfoss for further information regarding neutral line.

Table 9: Main Power Wires and Breaker Selection Based on Current Ratings

Active power filter rated current [A]	Breaker size [A]	R/S/T Wire diameter [mm^2 (AWG)]	N Wire Diameter [mm^2 (AWG)]	PE Wire Diameter [mm^2 (AWG)]
30	50	16 (6)	16 (6)	16 (6)
50	80	35 (2)	35 (2)	16 (6)
75	125	50 (1-1/0)	50 (1-1/0)	25 (4)
100	160	70 (2/0)	70 (2/0)	35 (2)
150	250	95 (3/0)	95 (3/0)	50 (1-1/0)
200	315	150 (300 MCM)	150 (300 MCM)	70 (2/0)
300	500	2x120 (2x4/0)	2x120 (2x4/0)	120 (4/0)
350	550	2x120 (2x4/0)	2x120 (2x4/0)	120 (4/0)
400	630	2x150 (2x300 MCM)	2x150 (2x300 MCM)	150 (300 MCM)
450	700	2x185 (2x350 MCM)	2x185 (2x350 MCM)	185 (350 MCM)
500	800	2x240 (2x500 MCM)	2x240 (2x500 MCM)	240 (500 MCM)
600	(500 + 500) or 1000	2x300 (2x600 MCM)	2x300 (2x600 MCM)	240 (500 MCM)
700	(500 + 630) or 1150	2x300 (2x600)	2x300 (2x600)	240 (500 MCM)
750	(500 +700) or 1250	2x400 (2x750 MCM)	2x400 (2x750 MCM)	240 (500 MCM)

5.3 Control Specification

Table 10: Control Specification

Functions	Description	
Switching frequency	20 kHz	
Controller	DSP + FPGA	
Communication	Modbus RTU (RS485)	Modbus TCP/IP (Ethernet)

5.4 Physical Specification

Table 11: Physical Specification

Functions	Description
Cabinet IP grade	IP20, IP54 Minimum IP30 for customized cabinet version.
Cooling method	Intelligent forced air cooling
Noise level	< 65 dB at 1 m (Module)
Cabinet dust filter for cabinets	Recommended: G3 Filter

5.5 Ambient Conditions

Table 12: Environment requirements

Functions	Description
Ambient temperature	Refer to Table 13 and Table 14.
Relative humidity	0% ~ 95% without condensation
Altitude	≤ 1000 m rated capacity. 1000 m ~ 3000 m (derating 1% per 100 m).

Table 13: Working temperature range IP20 modules

Module type	Working temperature range with 100% capacity	Capacity derating overtemperature
30A Active Power Filter Module	-10 °C ~ 50 °C (14 °F~122 °F)	50% at 55 °C (131 °F) 0% at 55 °C above
50A Active Power Filter Module	-10 °C ~ 50 °C (14 °F~122 °F)	50% at 55 °C (131 °F) 0% at 55 °C above
75A Active Power Filter Module	-10 °C ~ 40 °C (14 °F~104 °F)	80% at 50 °C (122 °F) 50% at 55 °C (131 °F) 0% at 55 °C above

Table 13: Working temperature range IP20 modules ***(continued)***

Module type	Working temperature range with 100% capacity	Capacity derating overtemperature
100A Active Power Filter Module	-10 °C ~ 50 °C (14 °F~122 °F)	50% at 55 °C (131 °F) 0% at 55 °C above
150A Active Power Filter Module	-10 °C ~ 40 °C (14 °F~104 °F)	80% at 50 °C (122°F) 50% at 55 °C (131°F) 0% at 55 °C above

Table 14: Working temperature range IP54 cabinets

Cabinet type	Working temperature range with 100% capacity	Capacity derating overtemperature
100A Active Power Filter Cabinet	-10 °C ~ 40 °C (14 °F~104 °F)	80% at 50 °C (122 °F) 50% at 55 °C (131 °F) 0% at above 55 °C
150A Active Power Filter Cabinet	-10 °C ~ 40 °C (14 °F~104 °F)	80% at 50 °C (122 °F) 50% at 55 °C (131 °F) 0% at above 55 °C
200A Active Power Filter Cabinet	-10 °C ~ 40 °C (14 °F~104 °F)	80% at 50 °C (122 °F) 50% at 55 °C (131 °F) 0% at above 55 °C
300A Active Power Filter Cabinet	-10 °C ~ 40 °C (14 °F~104 °F)	80% at 50 °C (122 °F) 50% at 55 °C (131 °F) 0% at above 55 °C

5.6 HMI Display Element Specification

7" HMI Display

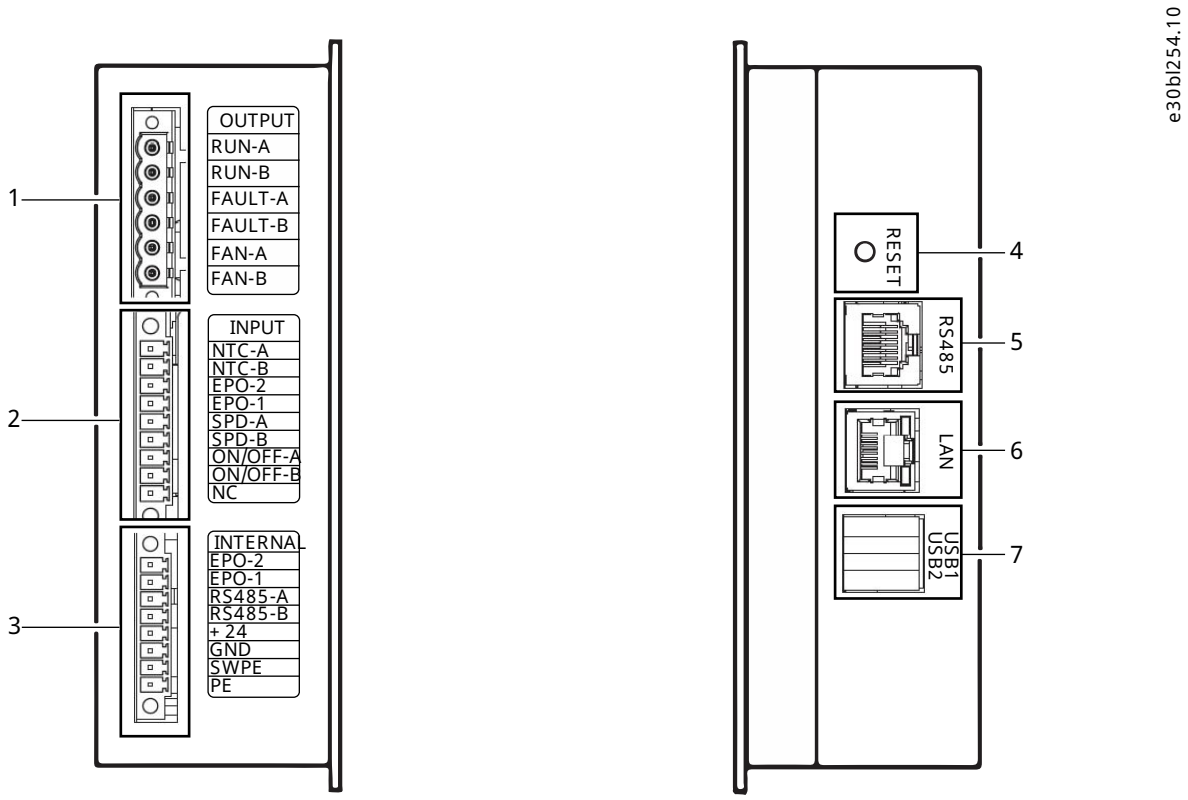

Figure 9: HMI-F Left and Right Side Element Specification

Except for the input and output ports, other terminals are insulated. Contact with these terminals does not cause risk of electric shock.

Table 15: Input and Output Port Specification

Port definition	Port specification
Output (Dry contacts)	250 Vac/ 30 V DC. 2.5 A
Input (NTC)	R_{25}=10 kohm, $B_{25/85}$=3435, ±1%
Input (Except for NTC)	24 V, 10 mA

Table 16: Definition of Output Dry Contact Signals Interface

Pin number	Signal	Electrical character		Function
1	RUN-A	250 Vac/30 Vdc	2.5 A	Run state (PM Run, Close)
2	RUN-B	250 Vac/30 Vdc	2.5 A	
3	FAULT-A	250 Vac/30 Vdc	2.5 A	Fault state (PM Fault, Close)
4	FAULT-B	250 Vac/30 Vdc	2.5 A	
5	FAN-A	250 Vac/30 Vdc	2.5 A	Fan control (Fan ON, Close; Fan OFF, Open)
6	FAN-B	250 Vac/30 Vdc	2.5 A	

Table 17: Definition of Output Wet Contact Signals Interface

Pin number	Signal	Electrical character		Function
1	NTC-A	NA	NA	Cabinet ambient NTC
2	NTC-B	NA	NA	
3	EPO-2	24 V	10 mA	System EPO (Close, Enable; Open, Disable)
4	EPO-1	24 V	10 mA	
5	SPD-A	24 V	10 mA	System SPD (Close, SPD Fault; Open, No Fault)
6	SPD-B	24 V	10 mA	
7	ON/OFF-A	24 V	10 mA	PM Turn ON/OFF (Close, Turn ON; Open, Turn OFF)
8	ON/OFF-B	24 V	10 mA	
9	NC	-	-	NC

Table 18: Definition of RS485 Interface

Pin number	Signal	Function
1	Reserved	Internal use
2	Reserved	
3	Reserved	
4	FG1	RS485 signal ground
5	Reserved	Internal use
6	Reserved	
7	RS485A	Outer RS485 use
8	RS485B	

Table 19: Definition of LAN Interface

Pin number	Signal	Function
1	TXP	Positive end of data transmission
2	GND	Signal ground
3	TXM	Negative end of data transmission
4	RXP	Positive end of data reception
5	GND	Signal ground
6	RXM	Negative end of data reception
7	NC	-
8	NC	-

Refer to separate Modbus mapping document for information of usage and configuration.

10" HMI Display

Except for the dry contacts and wet contacts, other terminals are insulated. Contact with these terminals does not cause risk of electric shock.

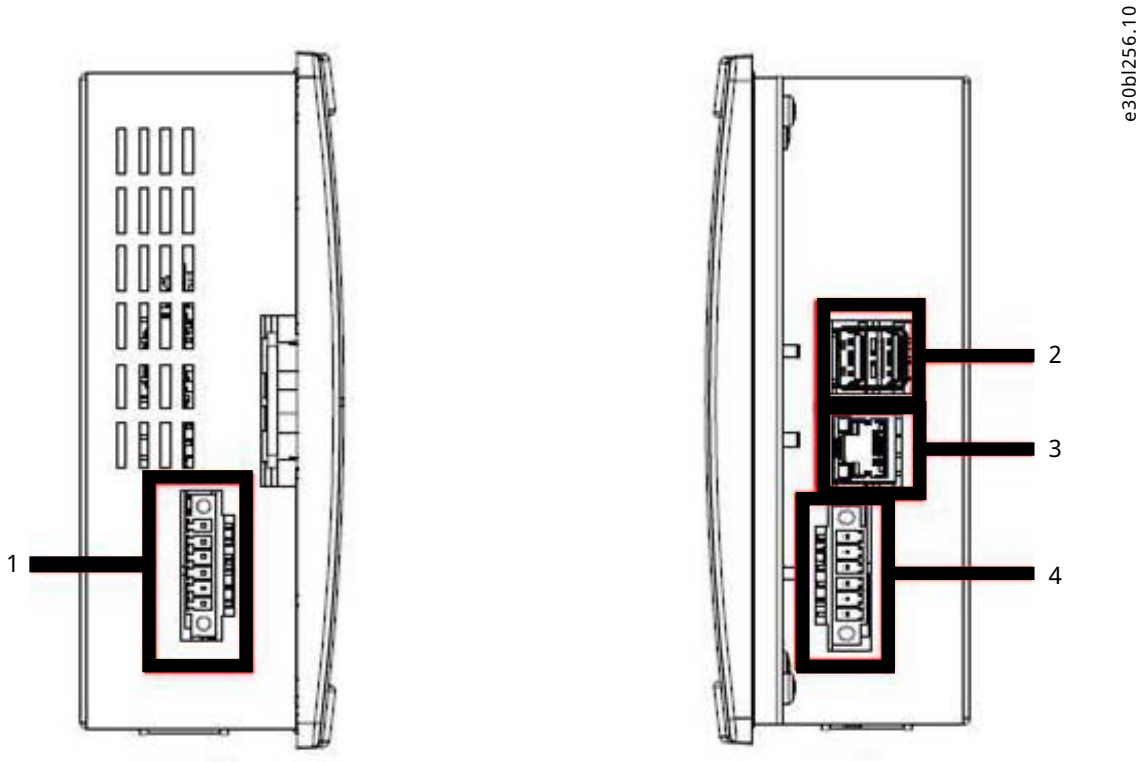

Figure 10: HMI-F10 Left and Right Side

Table 20: Dry Contacts and Wet Contacts Specification

Port definition	Port specification
Dry contacts	250 Vac/30Vdc, 2.5 A
Wet contacts	24 V, 10 mA

Table 21: Definition of Output Dry Contact Signals Interface

Pin number	Signal	Electrical character		Function
1	RUN-A	250 Vac/30 Vdc	2.5 A	Run state (PM Run, Close)
2	RUN-B	250 Vac/30 Vdc	2.5 A	
3	FAULT-A	250 Vac/30 Vdc	2.5 A	Fault state (PM Fault, Close)
4	FAULT-B	250 Vac/30 Vdc	2.5 A	
5	FAN-A	250 Vac/30 Vdc	2.5 A	Fan control (ON, Close; Fan OFF, Open)
6	FAN-B	250 Vac/30 Vdc	2.5 A	

Table 22: Definition of Output Wet Contact Signals Interface

Pin number	Signal	Electrical character		Function
1	EPO-2	24 V	10 mA	System EPO (Close, Enable; Open, Disable)
2	EPO-1	24 V	10 mA	
3	SPD-A	24 V	10 mA	System SPD (Close, SPD Fault; Open, No Fault)
4	SPD-B	24 V	10 mA	
5	ON/OFF-A	24 V	10 mA	PM turn ON/OFF (Close Turn ON; Open Turn OFF)
6	ON/OFF-B	24 V	10 mA	

Table 23: Definition of External Interface (Communication Terminals)

Pin number	Signal	Function
1	PE	PE
2	RS485A	Outer RS485 use
3	RS485B	
4	Reserved	Internal use
5	Reserved	Internal use
6	GF2	RS485 signal ground

Table 24: Definition of LAN Interface

Pin number	Signal	Function
1	TXP	Positive end of data transmission
2	GND	Signal ground
3	TXM	Negative end of data transmission
4	RXP	Positive end of data reception
5	GND	Signal ground
6	RXM	Negative end of data reception
7	NC	-
8	NC	-

Refer to separate Modbus mapping document for information of usage and configuration.

6 Mechanical Installation Considerations

6.1 Pre-Installation

6.1.1 Planning the Installation Site

To select the most appropriate installation site, consider the following:

- Ambient temperature conditions.
- Altitude at the installation point.
- Installation and compensation method.
- Cooling.
- Position of the active filter.
- Cable routing and EMI conditions.
- Ensure that the filter rating matches the grid voltage and frequency.
- Ensure that the external fuses are rated correctly.

6.1.2 Receiving the Unit

When receiving the unit, ensure that the packaging is intact and note any damage that may have occurred during transport. If there are signs of damage, immediately contact the shipping company to file a complaint.

Before unpacking the active filter, place it as close to its final installation site as possible. To avoid damage, keep the filter boxed and on the pallet as long as possible.

6.1.2.1 Exterior and Interior Inspection

- Exterior inspection:
  - **a.** During the delivery of the Active Power Filter, unexpected situations can occur. Inspect the exterior packaging when receiving the Active Power Filter is recommended.
- Interior inspection:
  - **a.** Check the rating label on the Active Power Filter, and check that the Active Power Filter complies with the ordered product.
  - **b.** Check if any component is damaged or loose.
  - **c.** Check if any accessory is missing.
  - **d.** Package list of the HMI and Active Power Filter, refer to 6.1.3 Accessories.

Contact the local Danfoss supplier of the Active Power Filter if any damages are observed during the exterior and interior inspection.

Repack the Active Power Filterand all accessories if the Active Power Filter must be returned. Use the original packing materials the Active Power Filter was received in.

6.1.3 Accessories

Table 25: Accessories, Item, and Quantity for Active Power Filter

Item	Quantity [Pcs]
Test report	1
User Guide	1
CT cable	1

Table 25: Accessories, Item, and Quantity for Active Power Filter *(continued)*

Item	Quantity [Pcs]
Communication line with terminal	1
M6×16 mm screw	4

Table 26: Accessories, Item, and Quantity for Active Power Filter System Cabinet

Item	Quantity [Pcs]
Cabinet wiring diagram	1
Key to cabinet front door	2

Table 27: Accessories, Item, and Quantity for 7" HMI Display

Item	Quantity [Pcs]
Test report	1
Communication line with terminal	1
M5 fixing screw	4
6-pin terminal	1
9-pin terminal	1

Table 28: Accessories, Item, and Quantity for 10" HMI Display

Item	Quantity [Pcs]
Test report	1
Communication line with terminal	1
M5 fixing screw	4
6-pin terminal	4

6.1.4 Storage Before Installation

- Use the original packing materials to pack the Active Power Filter to avoid any possible damage from rodents.
- Place the Active Power Filter in a dry indoor area if it must be stored before installation. The allowable storage temperature is -40 °C ~ 70 °C (-40 °F ~ 158 °F) and relative humidity is below 95%.
- Place the HMI in a dry indoor area if it must be stored before installation. The allowable storage temperature is -30 °C ~ 70 °C (-22 °F ~ 158 °F) and the relative humidity is within 95% (non-condensing).

6.1.5 Mechanical Dimensions

Active Power Filter Module

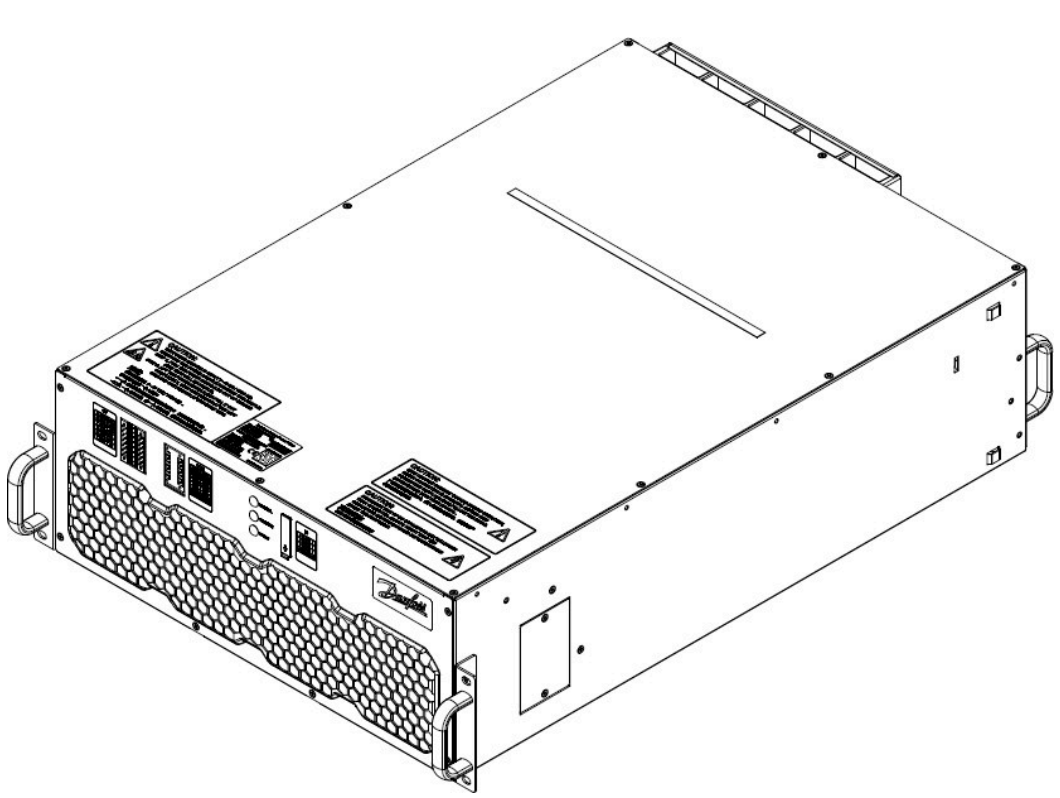

Figure 11: Active Power Filter Module

Table 29: Active Power Filter Module Outer Dimensions and Weight

Model	Height [mm (in)]	Width [mm (in)]	Depth [mm (in)]	Weight [kg (lbs)]
APF-380-30-FM4	190 (7.5)	484 (19.1)	641.5 (25.3)	33 (72.8)
APF-380-30-FM3	190 (7.5)	484 (19.1)	641.5 (25.3)	32 (70.5)
APF-380-50-FM4	190 (7.5)	484 (19.1)	641.5 (25.3)	34 (75)
APF-380-50-FM3	190 (7.5)	484 (19.1)	641.5 (25.3)	33 (72.8)
APF-380-75-FM4	190 (7.5)	484 (19.1)	641.5 (25.3)	35 (77.2)
APF-380-75-FM3	190 (7.5)	484 (19.1)	641.5 (25.3)	34 (75)
APF-380-100-FM4	190 (7.5)	484 (19.1)	731.5 (28.8)	48 (105.8)
APF-380-100-FM3	190 (7.5)	484 (19.1)	731.5 (28.8)	47 (103.6)
APF-380-150-FM4	190 (7.5)	484 (19.1)	731.5 (28.8)	49 (108)
APF-380-150-FM3	190 (7.5)	484 (19.1)	731.5 (28.8)	48 (105.8)

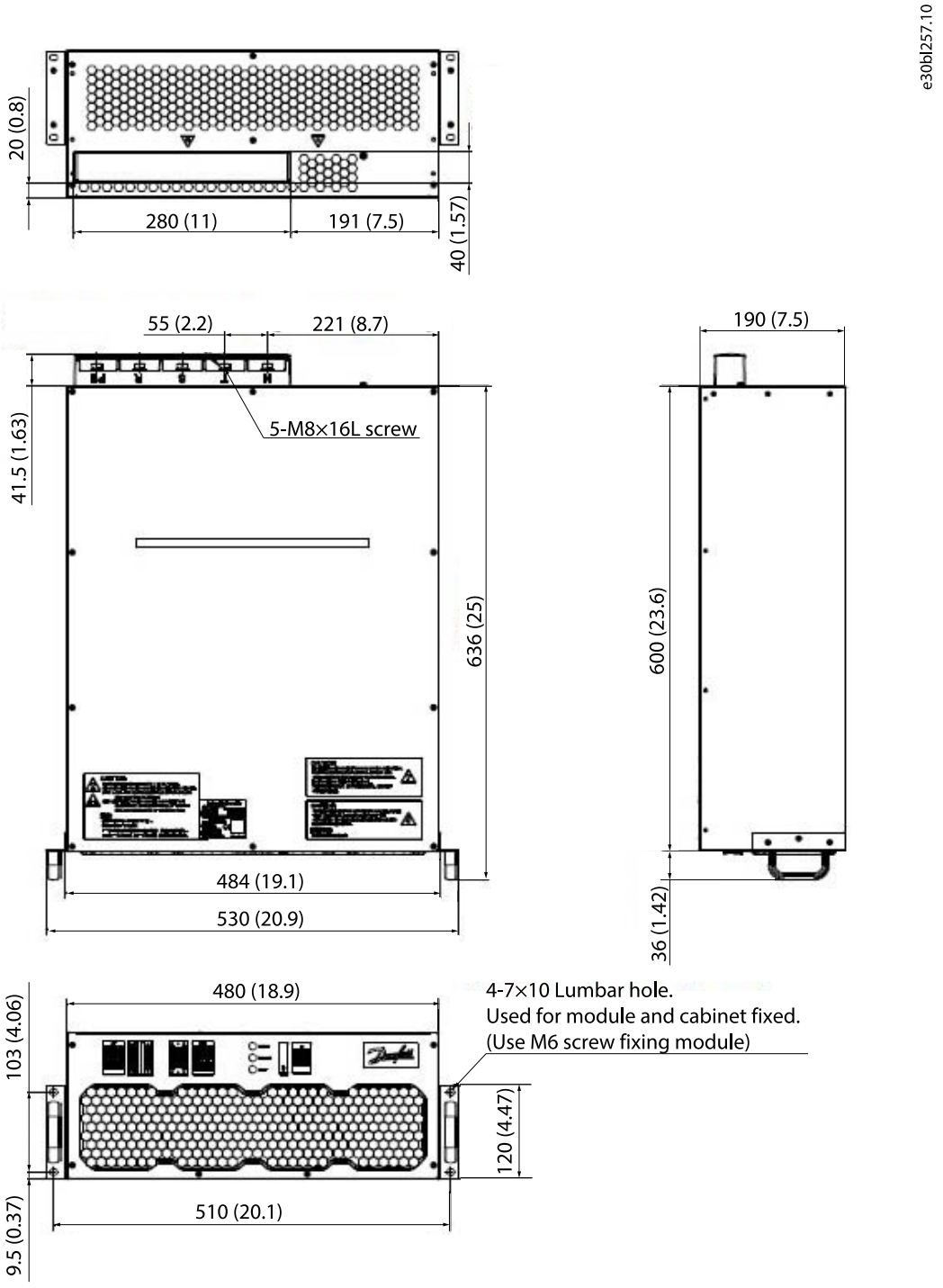

Figure 12: Active Power Filter Module Dimensions_30 A/50 A/70 A Model

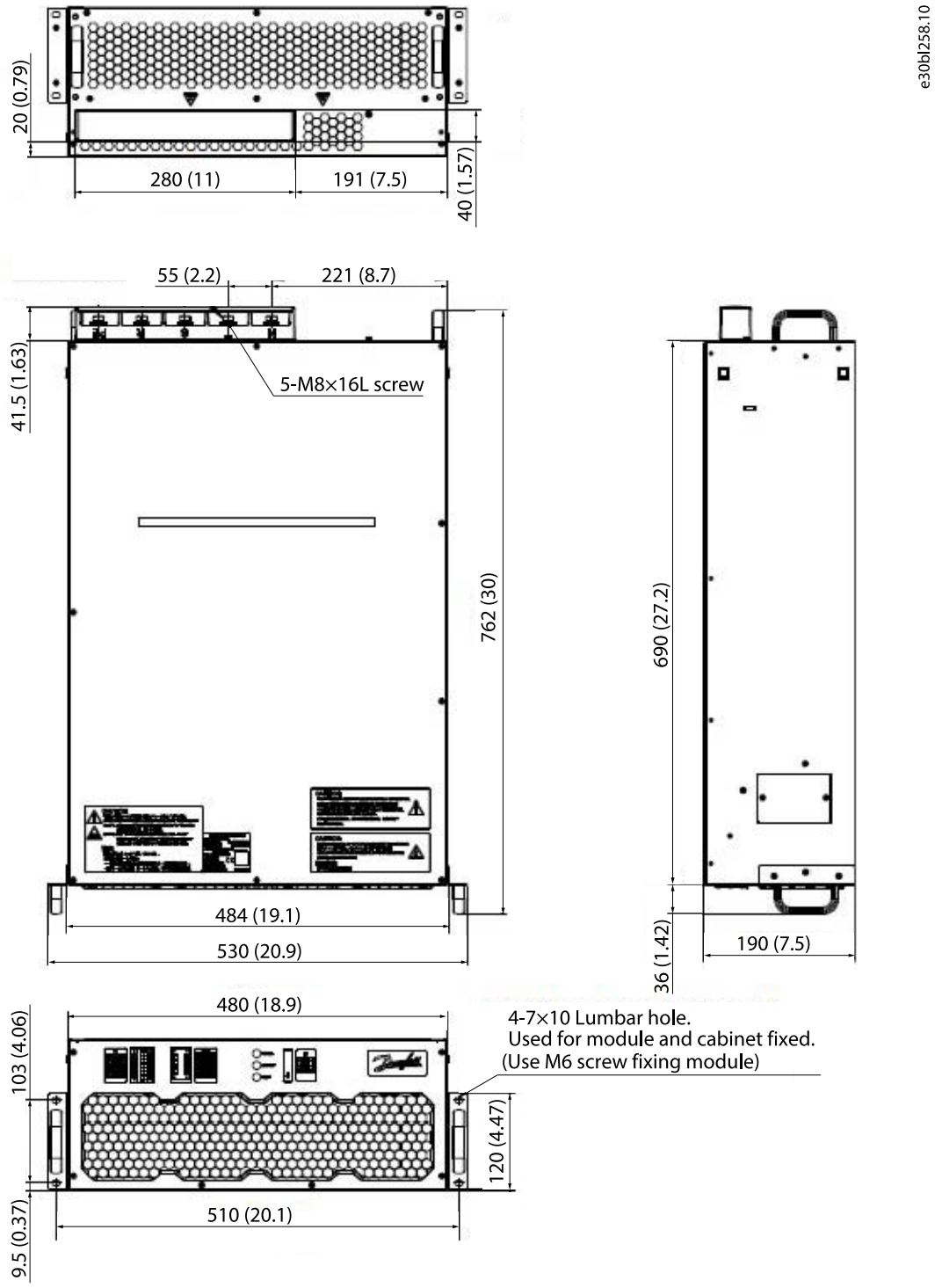

Figure 13: Active Power Filter Module Dimensions 100 A/150 A Model

HMI Display

Table 30: HMI Display Outer Dimensions

Display	Height [mm (in)]	Width [mm (in)]	Depth [mm (in)]
7" HMI-F display	150 (5.91)	210 (8.27)	49 (1.93)
10" HMI-F10 display	155 (6.10)	310 (12.20)	59 (2.32)

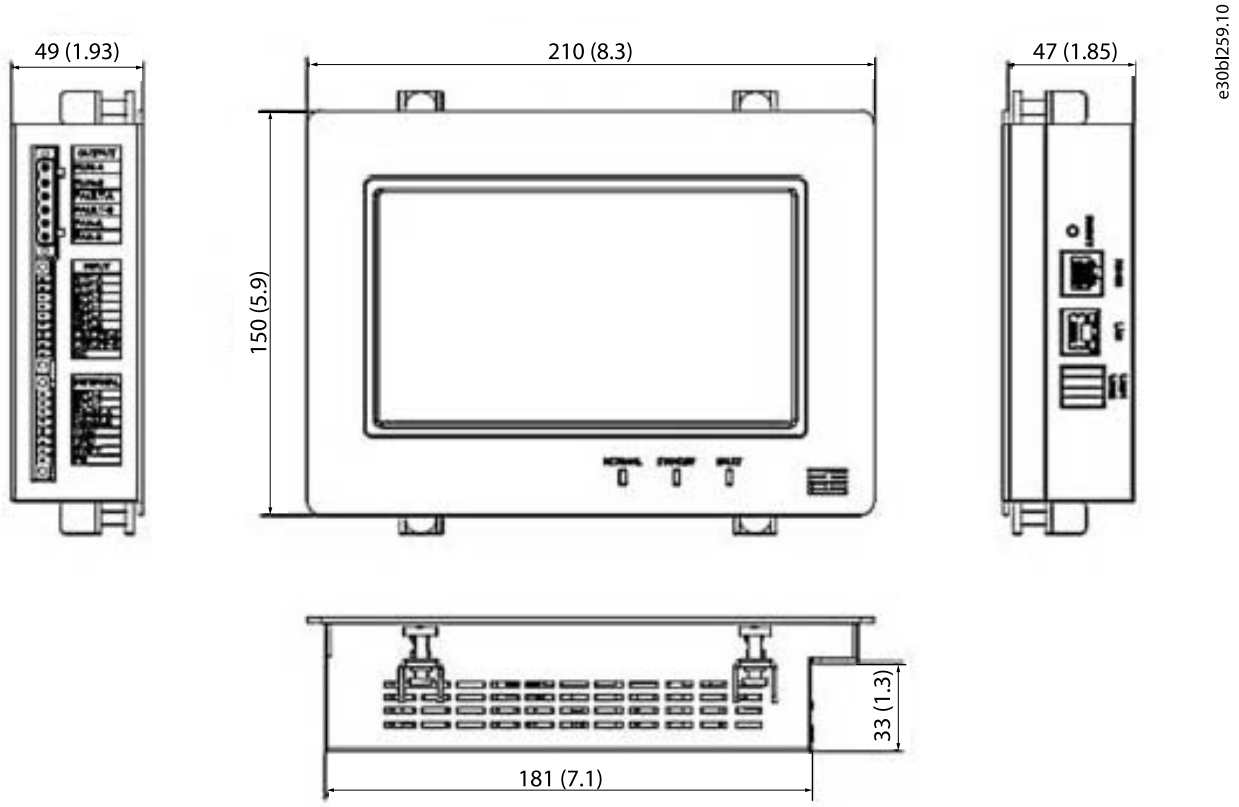

Figure 14: 7" HMI Display Dimensions

Align the 7" HMI display with the mounting hole on the cabinet. Use the 4 fixing screws to fasten the 7" HMI display to the cabinet.

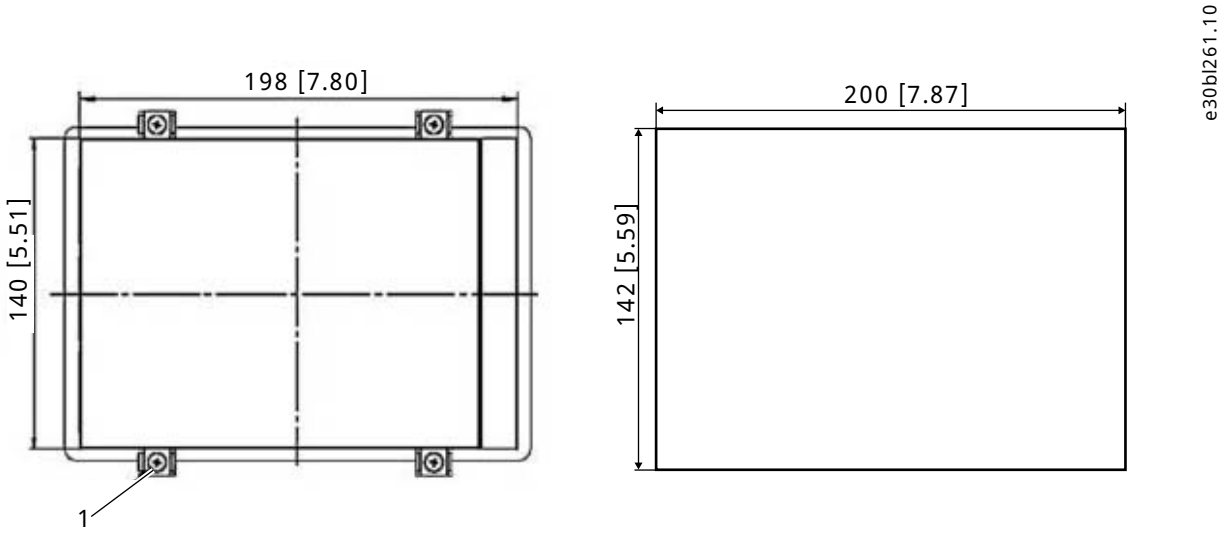

Figure 15: 7" HMI Display Mounting Hole Dimensions and Fixation

1	4 x M5 fixing screws

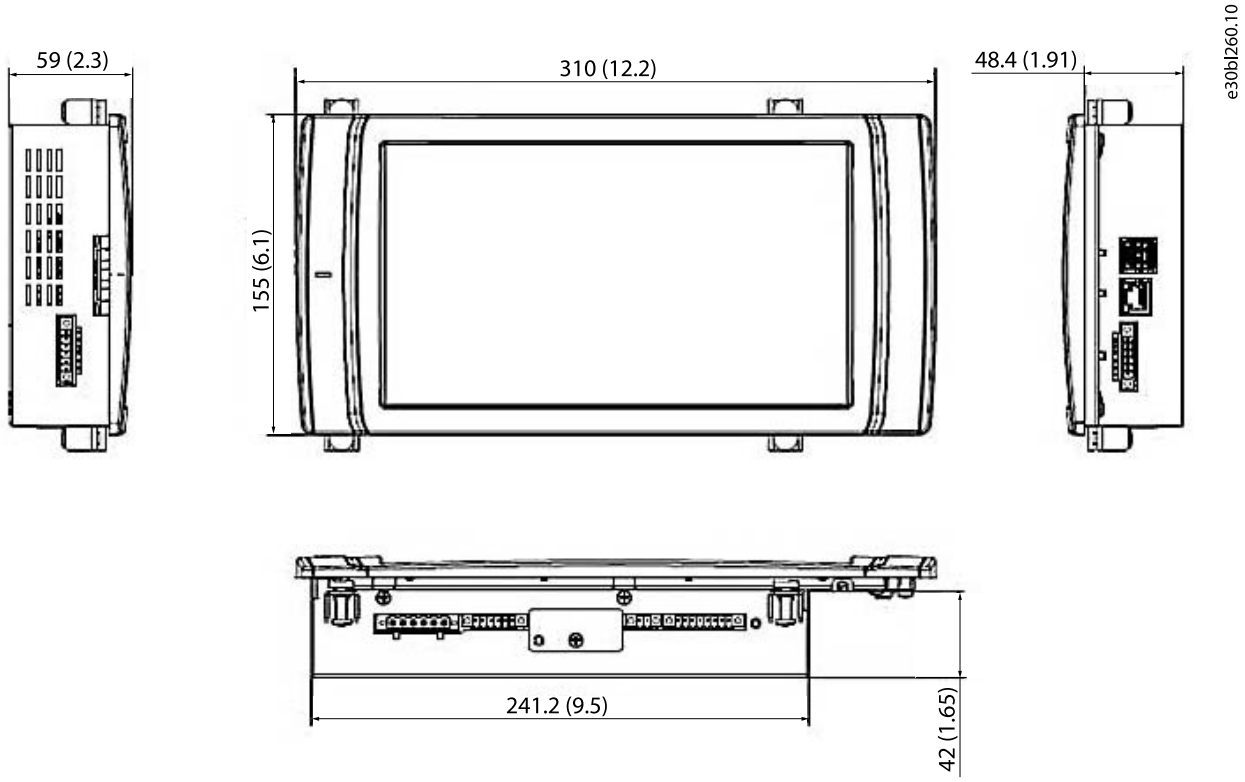

Figure 16: 10" HMI Display Dimensions

Align the 10" HMI display with the mounting hole on the cabinet. Use the 4 fixing screws to fasten the 10" HMI display to the cabinet.

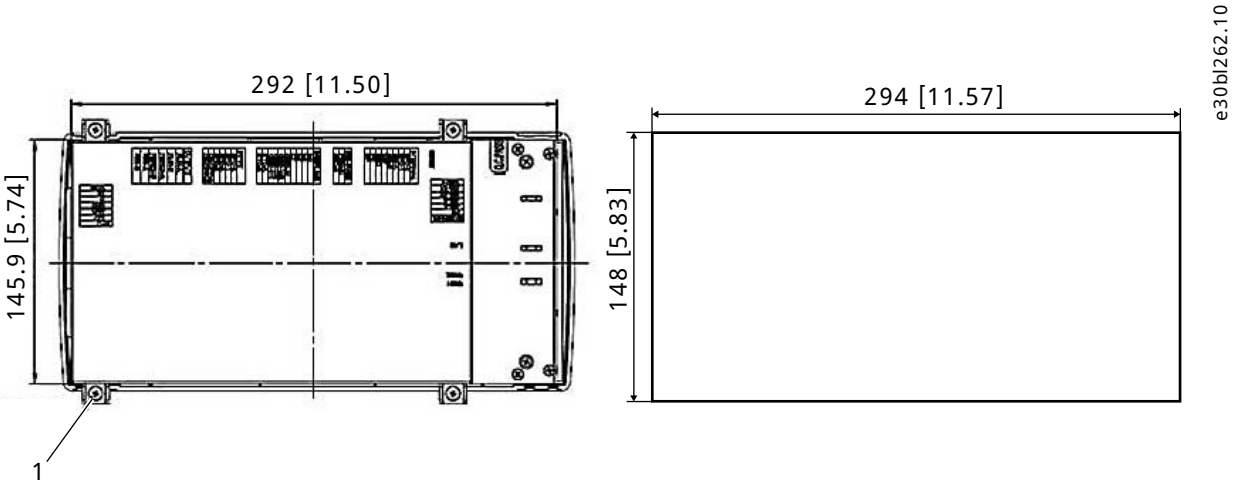

Figure 17: 10" HMI Display Mounting Hole Dimensions and Fixation

1	4 x M5 fixing screws

6.2 Mechanical installation

6.2.1 Safety Precautions

Review all safety warnings and cautions in 2.3 General Safety Precautions and 2.4 Electrical Installation Precautions before the mechanical installation, electrical installation, or start up begin.

- Comply with the target group and necessary qualifications for installation, assembly, and start up of the Active Power Filter. Refer to 2.1 Target Group and Necessary Qualifications.
- Do not open or remove the covers or panels of the Active Power Filter to avoid high voltage electric shock. Only authorized Danfoss personnel or personnel under the supervision of authorized Danfoss personnel must perform this action.
- Do not install or start up the Active Power Filter if liquid is poured or splashed on the Active Power Filter or if any conductive powders or metals enters into the Active Power Filter.
- Do not install or start up the Active Power Filter if any deformation are observed on the Active Power Filter.
- Passage ways and installation area must be large enough to accommodate a forklift and system cabinet.
- The installation location must be capable to withstand the weight of the Active Power Filter. Refer to 6.1.5 Mechanical Dimensions for the weight of the Active Power Filter.

6.2.2 Required Tools

- Phillips screwdriver PH1 5 mm.
- Phillips screwdriver PH2 6 mm.
- Phillips screwdriver PH3 8 mm.
- Slotted screwdriver.
- Wrench.
- Socket extensions.
- 13 mm socket.
- 16 mm socket.

6.2.3 Installation Environment Requirements

The Active Power Filter is applicable to many applications and can meet the particular installation requirements of industrial sites, power distribution rooms, and IT data centers. According to different work conditions and environment requirements, Active Power Filter modules can be installed in a standard or customized cabinet. Flexible configurations and on-site capacity expansion can also be achieved based on current and subsequent capacity requirements.

- Install the Active Power Filter indoor only. Outdoor installations are strictly prohibited.
- When deciding the installation area, take the noise level of the Active Power Filter into consideration. Refer to 5.4 Physical Specification for noise level.
- Always keep the installation area clean and tidy.
- Do not install the Active Power Filter equipment in sandy, dusty, or heavy polluted environment as electrical conductive dust particles can damage the equipment. Contact Danfoss for precaution measures, if the Active Power Filter equipment must be installed in such environment.
- Install the Active Power Filter system in altitude less or equal to 1000 m (3280 ft). Derating 1% per 100 m (328 ft) when the altitude is 1000 m–3000 m (3280–9842 ft). Contact Danfoss for further information regarding altitude requirements for Active Power Filter.
- The operating environment temperature of the Active Power Filter must be between -10 °C (32 °F) and 50 °C (122 °F). The relative humidity must be within 95% (non-condensing). Refer to 5.5 Ambient Conditions for detailed derating information.
- Minimum IP30 rating is required for customized system cabinets.
- For improved heat dissipation, consider protection rating of maximum IP30 cabinet solutions for Active Power Filter above 300 A. Higher protection rating (IP) cabinets for Active Power Filter above 300 A is not recommended.

6.2.4 Clearance Requirements

NOTICE

Keep the area around the Active Power Filter clear of objects to allow ventilation and easy access when operating the Active Power Filter.

The Active Power Filter module has its own cooling fan that adopts the front-inlet and rear-outlet airflow design. It is recommended that a clearance of 500 mm (19.7 in) must be maintained for heat dissipation. Refer to Figure 18 for airflow diagram for the Active Power Filter module.

It is recommended that the ventilation inlet openings must be in the front and that the ventilation outlet openings must be in the back of the Active Power Filter. Maintain a clearance of 1000 mm (39.4 in) at the front and back of the Active Power Filter system cabinet for operation, maintenance, and wiring. If installation on a wall is required, top airflow cabinet type must be selected. Contact Danfoss for further information regarding cabinet airflow types. Corresponding ventilation fans must be installed to comply with the Active Power Filter ventilation requirement. Refer to Figure 19 for airflow diagram for the Active Power Filter system cabinet.

Individual Active Power Filter modules and system cabinets have minimum ventilation requirements. Obtain the minimum ventilation requirements to ensure proper cooling of the Active Power Filter modules and system cabinets. Do not block or cover the air inlet and outlet, to avoid overheating of the Active Power Filter modules and system cabinets. Ensure that the ventilation air is free of electrical conductive particles, dust, and harmful gasses.

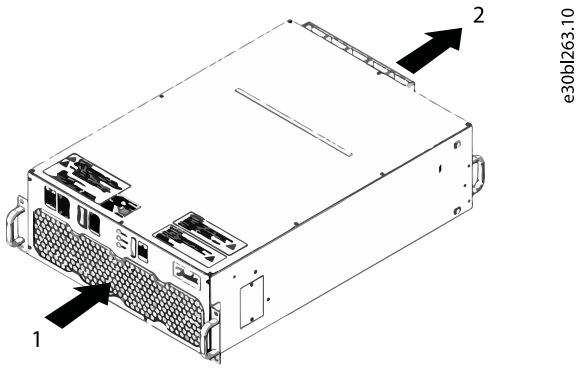

Figure 18: Airflow Diagram, Active Power Filter Module

1	Air inlet	**2**	Air outlet

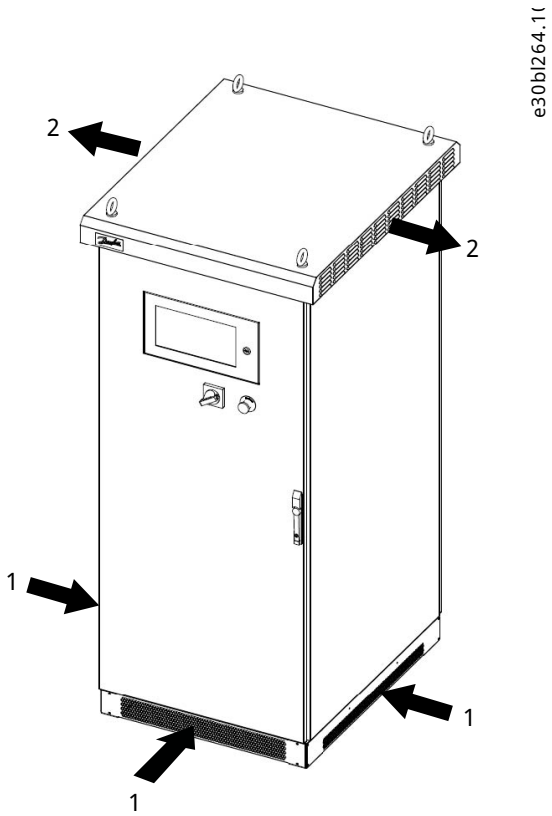

Figure 19: Airflow Diagram, Active Power Filter System Cabinet (IP54)

1	Air inlet	**2**	Air outlet

6.2.5 Active Power Filter Module Indicators

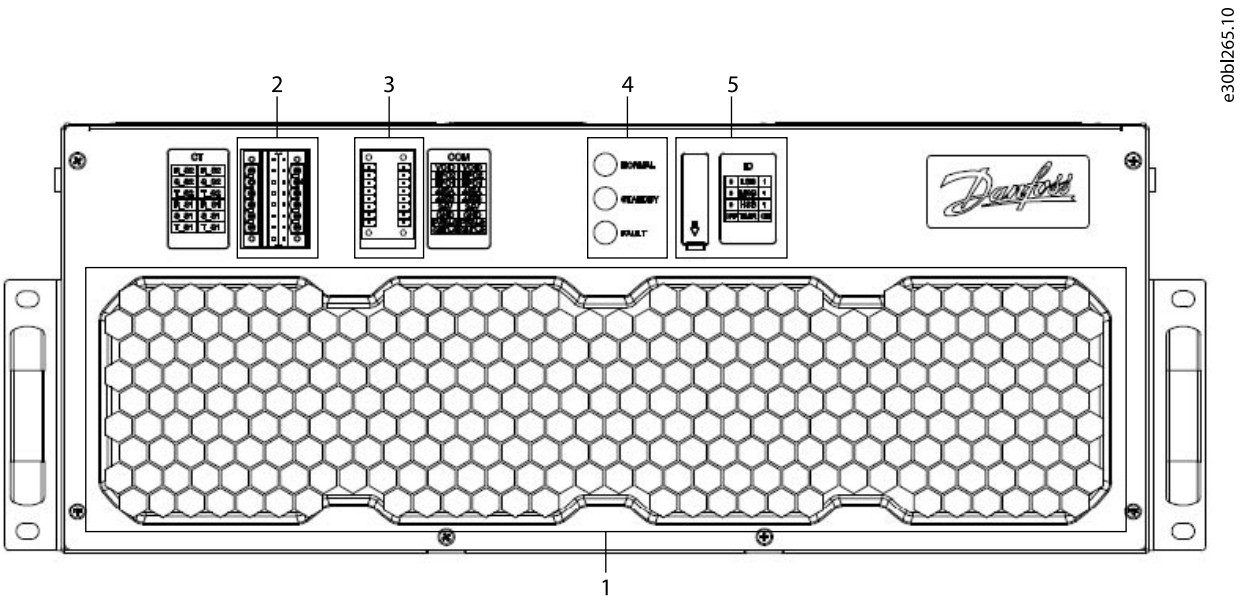

Figure 20: Active Power Filter Front of the Module

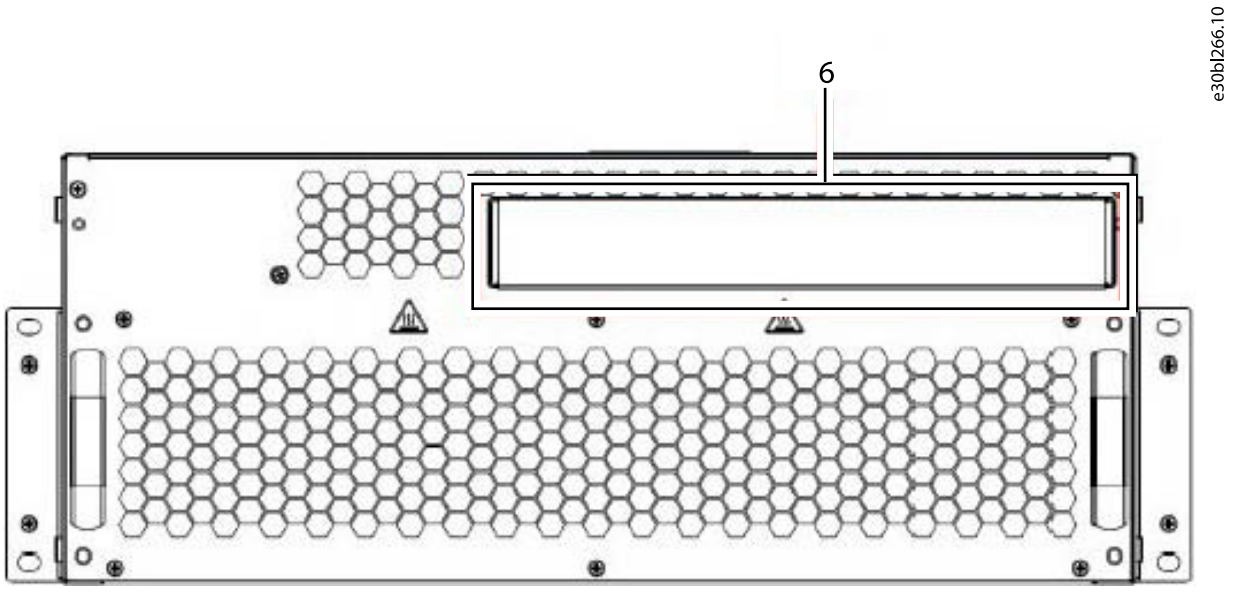

Figure 21: Active Power Filter Back of the Module

Table 31: Active Power Filter Indicators

Number	Item	Description
1	DC fan	DC fans for ventilation.
2	CT	CT signal terminals.

Table 31: Active Power Filter Indicators *(continued)*

Number	Item	Description
3	COM (communication terminals)	Communication terminals between the display and the module.
4	LED indicators	Module status indicator: • Green (Normal): The module operates normally. • Yellow (Standby): The module is in standby mode. • Red (Fault): The module is malfunctioning.
5	ID (DIP Switch)	Setup of the module ID and the terminal resistor.
6	Main Power Input Terminals	Main power wiring terminals for R/ S/ T/ N/ PE.

6.2.6 Stacking Active Power Filter Modules

Refer to 6.1.5 Mechanical Dimensions for the Active Power Filter module.

Install the Active Power Filter module in a customized cabinet with protective marking. The conductive metal part of the cabinet must be distanced from the live terminal of the Active Power Filter for safety purpose. Comply with the enclosure manufacturing standards requirements.

Active Power Filter modules can be stacked directly during installation. Installation of maximum 7 Active Power Filter modules in 1 cabinet is recommended. Appropriate ventilation channels for heat dissipation must be maintained.

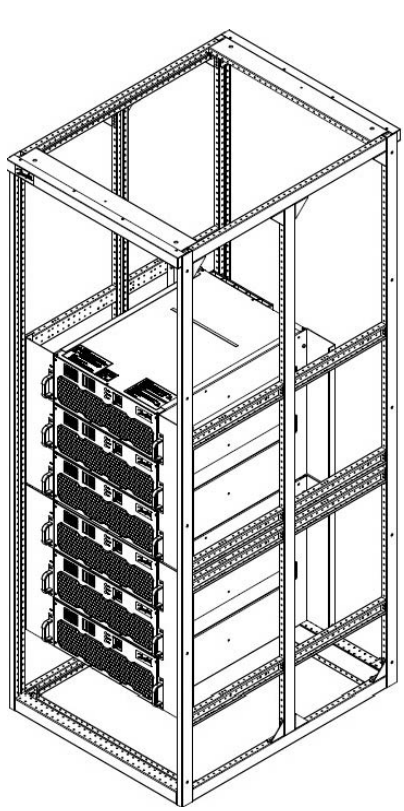

Figure 22: System Installation Diagram

Fasten the Active Power Filter modules and module mounting plate together, on the left and right side of the Active Power Filter modules. Refer to Figure 23.

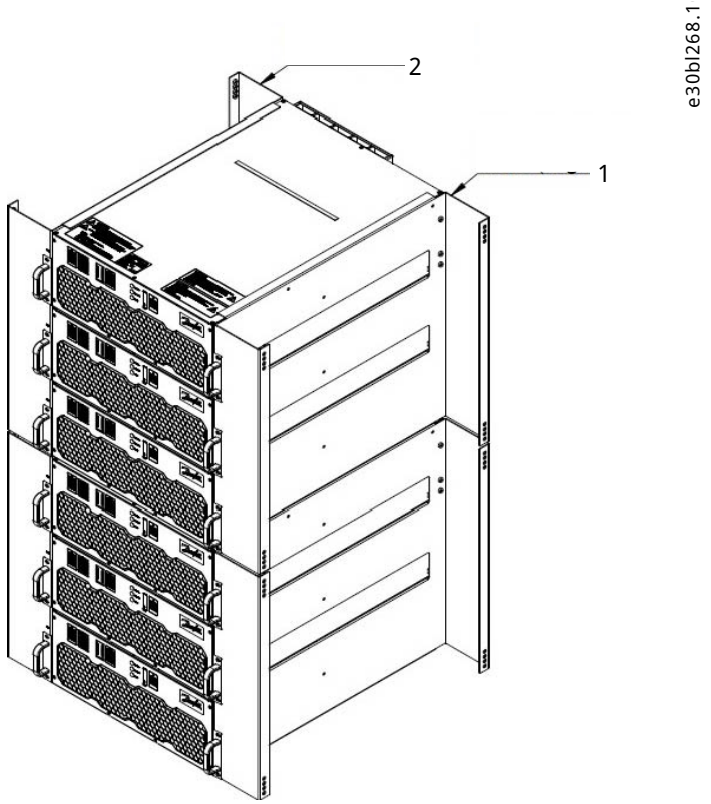

Figure 23: Installation of Module Mounting Plates

1	Module mounting plate right	**2**	Module mounting plate left

Fasten the module mounting plate with the supporting beams on the left and right side of the cabinet. Refer to Figure 24.

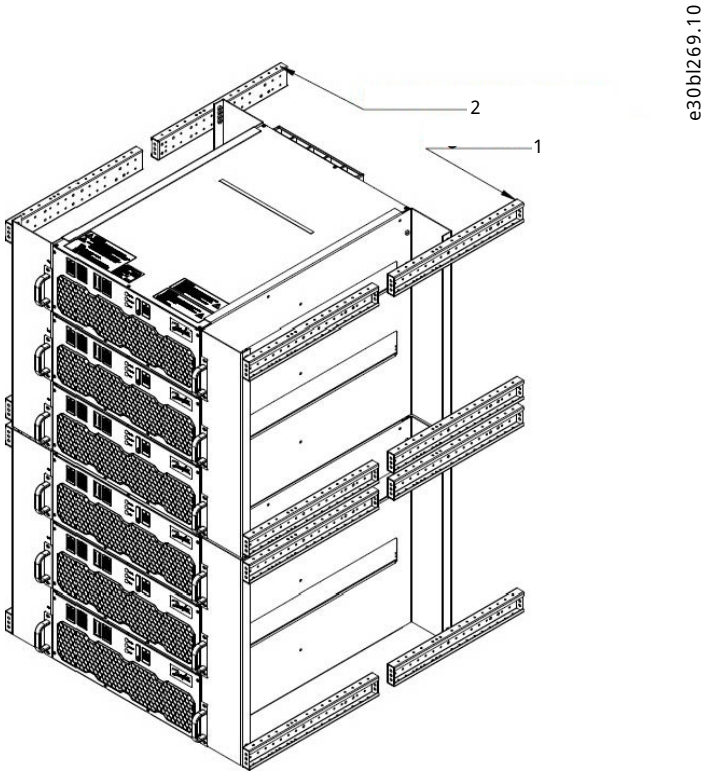

Figure 24: Installation of Supporting Beam

1	Supporting beam right	**2**	Supporting beam left

Refer to the Figure 25 for structure design of Active Power Filter modules installation panel. The illustration is an example of the design of the panel that accommodates 3 modules. The design is a C shape framework with a size of 800 mm (31.5 in) width.

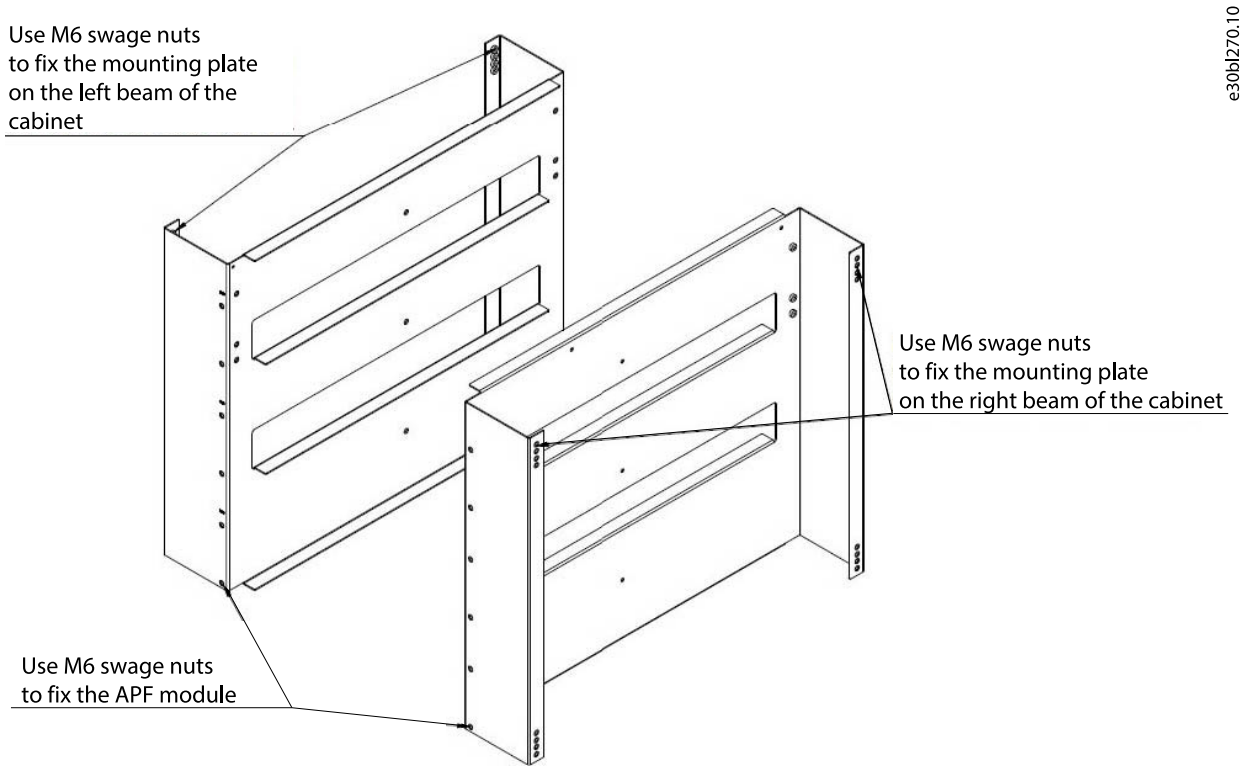

Figure 25: C Shape Framework

An extra sheet metal part is required, if the Active Power Filter module is packed with the system cabinet for delivery. To fix the module at the end on the system cabinet, use the installation hole at the end of the Active Power Filter module, or the installation hole on the left and right side of the Active Power Filter module.

Refer to Figure 26 for the size of installation hole at the end and on the side of the Active Power Filter 100 A/150 A Active Power Filter module.

Refer to Figure 27 for the size of installation hole at the end and on the side of the Active Power Filter 30 A/50 A/75 A Active Power Filter module.

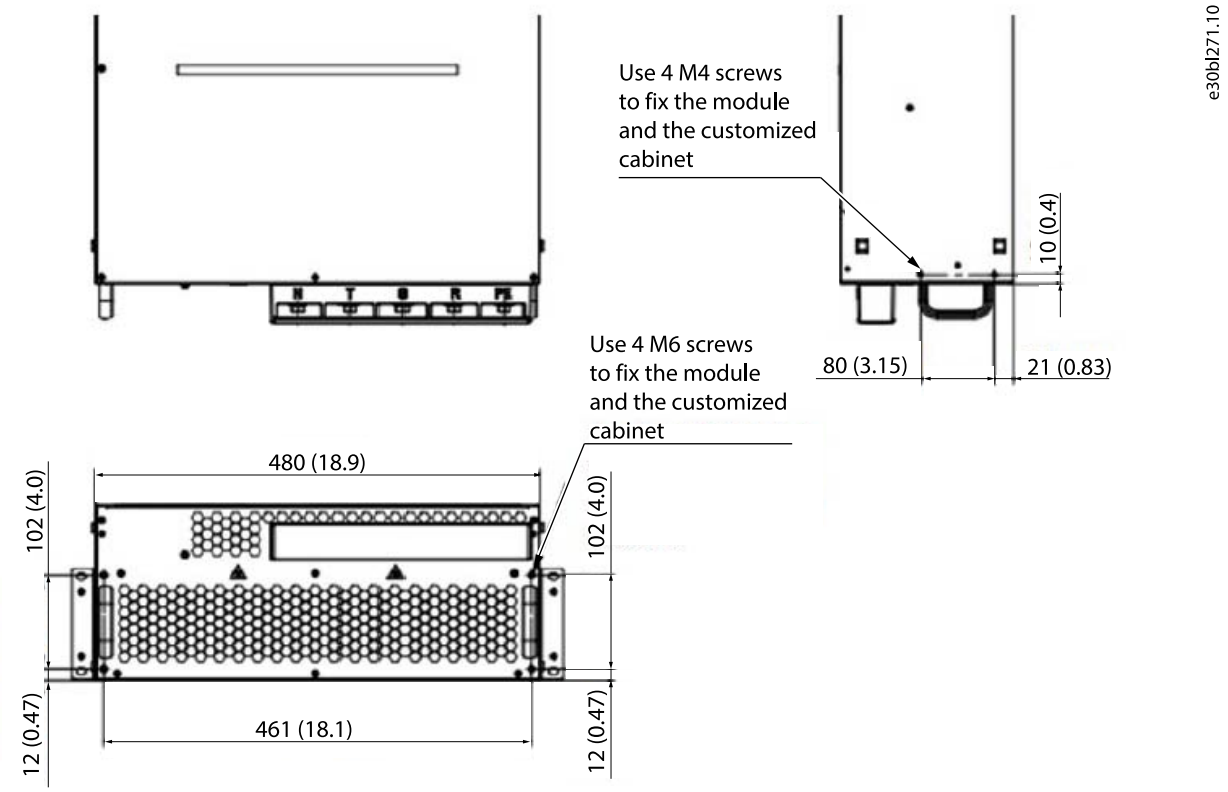

Figure 26: 100 A/150 A Module, Installation Holes on the End/Side

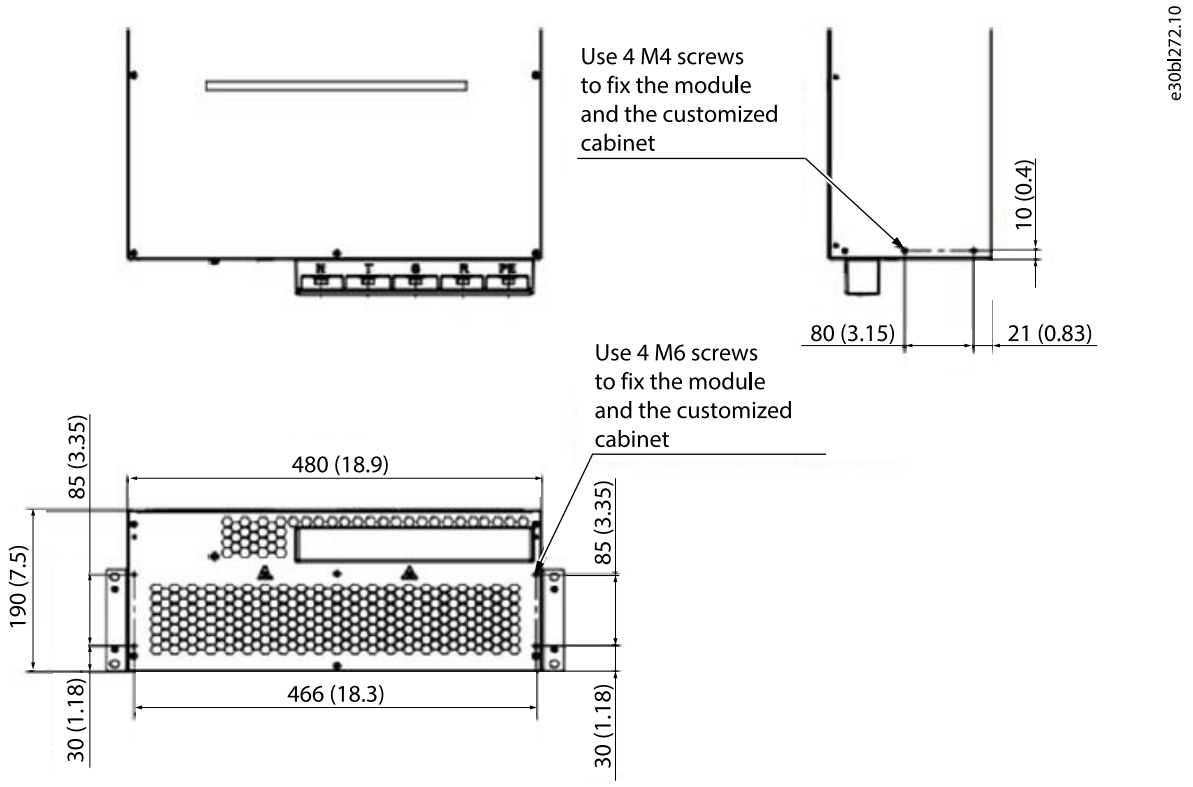

Figure 27: 30 A/50 A/75 A Module, Installation Holes on the End/Side

7 Electrical installation Considerations

7.1 Input Voltage and Frequency Range

Wide input voltage and frequency range are suitable for the applications with diesel generators and harsh power supply conditions.

Automatic detection for the input frequency. The input frequency can be 50 Hz or 60 Hz.

Auto start-up for the inverter: When the AC power source is back on, the inverter turns on automatically.

Table 32: Input Voltage and Frequency Range

Active power filter module type	Input voltage range	Frequency range
380 V 3P4W	228 V ~ 456 V	45 Hz ~ 66 Hz
380 V 3P3W	228 V ~ 480 V	45 Hz ~ 66 Hz

7.2 Short-circuit Protection

- The power wires for the Active Power Filter modules must be connected to a protective device. It is recommended that every module must be equipped with an overcurrent protection device certified by a third party. The installation location must be considered. Select a protection device that has enough breaking capacity.
- The capacity of the protective devices must fit the Active Power Filter module. To select a proper protection device in accordance with the capacity, refer to Table 33 and Table 34.
- 3-phase, 4 wire Active Power Filter is applicable to the power grid system with neutral grounding.

Table 33: Protection Device Model (Recommended)

Active power filter capacity [A]	Protection device model (Recommended)
30	Schneider NSX100H TM50D 3P3D (690 V 50A)
50	Schneider NSX100H TM80D 3P3D (690 V 80A)
75	Schneider NSX160H TM125D 3P3D (690 V 125A)
100	Schneider NSX160H TM160D 3P3D (690 V 160A)
150	Schneider NSX250H TM250D 3P3D (690 V 250A)

Table 34: Active Power Filter, Short Circuit Parameters

Active power filter capacity [A]	Conditional short-circuit current (Icc) [kA]	Prospective short-circuit current for the minimum demand (Icp, mr) [kA]	Short-circuit protection device (SCPD)
30	20	2.5	80A Fuse *2 Type: BUSSMANN 80FE
50	20	2.5	80A Fuse *2 Type: BUSSMANN 80FE
75	20	2.5	80A Fuse *2 Type: BUSSMANN 80FE

Table 34: Active Power Filter, Short Circuit Parameters *(continued)*

Active power filter capacity [A]	Conditional short-circuit current (Icc) [kA]	Prospective short-circuit current for the minimum demand (Icp, mr) [kA]	Short-circuit protection device (SCPD)
100	20	5.0	160A Fuse *2 Type: HINODE 660GH-160
150	20	5.0	160A Fuse *2 Type: HINODE 660GH-160

7.3 Inrush Voltage Protection

In accordance with the actual power system, it is recommended that appropriate inrush voltage protection devices are selected. If appropriate protection devices are not used, the inrush voltage can exceed the Active Power Filter capacity and cause damage. Contact Danfoss for further information regarding the Active Power Filter application.

Refer to Table 35 for recommended inrush voltage protection device.

Table 35: Inrush Protection Device

Wiring system	Model (Recommended)	Main technology indicator
3P3W	Sichuan Zhongguang Lightning ZGG40-385 (3+0) Ar	Nominal Operating Voltage U_O: 230 V AC Max. Continuous Operating Voltage U_C: 385 V AC Rated Discharge Current I_n: 20 kA Max. Discharge Current I_{max}: 40 kA Voltage Protection Level U_p: 1.8 kV
3P4W	Sichuan Zhongguang Lightning ZGG40-385 (3+1) r	

7.4 Load Current Detection for CT Installation and Wiring

- Determine the appropriate rated ratio of primary to secondary current. The primary current is recommended to be 1.5*In (Actual rated current).
- The rated voltage is more than or equal to the system voltage.
- The selection for secondary current is recommended to be 5 A.
- CT accuracy is recommended to be class 0.5.
- CT is not included in the scope of delivery for the Danfoss Active Power Filter.
- The nominal secondary capacity (rated load) of the CT must meet the requirement of secondary impedance (≥ 10 VA when the secondary current is 5 A). The capacity and the maximum 1 way wiring length from the CT to the Active Power Filter must be calculated according to the following formula:

$$L_{max} = \frac{P_{CT} - P1}{I^2} \cdot \frac{S}{\rho} \cdot \frac{1}{2}$$

Table 36: Capacity and the Maximum 1 Way Wiring Length (Parameters)

Parameter	Description
L_{max}	The maximum 1 way wiring length from the CT to the system cabinet (m).
P_{CT}	Nominal secondary capacity of the CT (VA).

Table 36: Capacity and the Maximum 1 Way Wiring Length (Parameters) *(continued)*

Parameter	Description
P1	Capacity loss and the internal impedance of the system cabinet. Each modules internal loss is around 2 VA.
I	Secondary current of the CT (A).
S	Cross-section area of the copper conductor (mm^2/AWG).
ρ	Resistivity of the copper conductor (calculated according to 0.0178 Ω × m/mm^2).

Table 37: Lmax and Cross-section Area when CT Secondary Current is 5A and Under Single Module System

Cross-section area of conductor [mm^2(AWG)]	L_{max}					
	15 VA CT [m (ft)]	20 VA CT [m (ft)]	25 VA CT [m (ft)]	30 VA CT [m (ft)]	35 VA CT [m (ft)]	40 VA CT [m (ft)]
2.5 (14)	36 (118)	50 (164)	64 (210)	78 (256)	92 (302)	106 (348)
4 (12)	58 (190)	80 (262)	103 (338)	125 (410)	148 (486)	157 (515)

8 Electrical installation

8.1 Wiring the Active Power Filter Module

NOTICE

The display communication cables are secondary wires. Keep an insulation distance of minimum 100 mm (3.9 in) from the main power cables.

The Active Power Filter is designed for multiple applications. It must be connected to a power grid system, in parallel with harmonic nonlinear loads, as a solution for harmonics mitigation.

Since Active Power Filter is used for harmonics mitigation, external CT must be connected to detect the harmonics current. Refer to 8.3 Wiring Basic CT and Installation.

1. Isolate the input power before the wiring of the Active Power Filter module begin.

   Refer to 2.3 General Safety Precautions and 2.4 Electrical Installation Precautions.

2. Ground the Active Power Filter module properly.

   To avoid any possible damage caused by current leakage.

3. Check the diameter and markings of the Active Power Filter module input wires, and verify that the wire diameter and phase sequence are correct.

   Refer to Figure 28 to perform wiring and 5.2 Cable Specification for power line specifications.

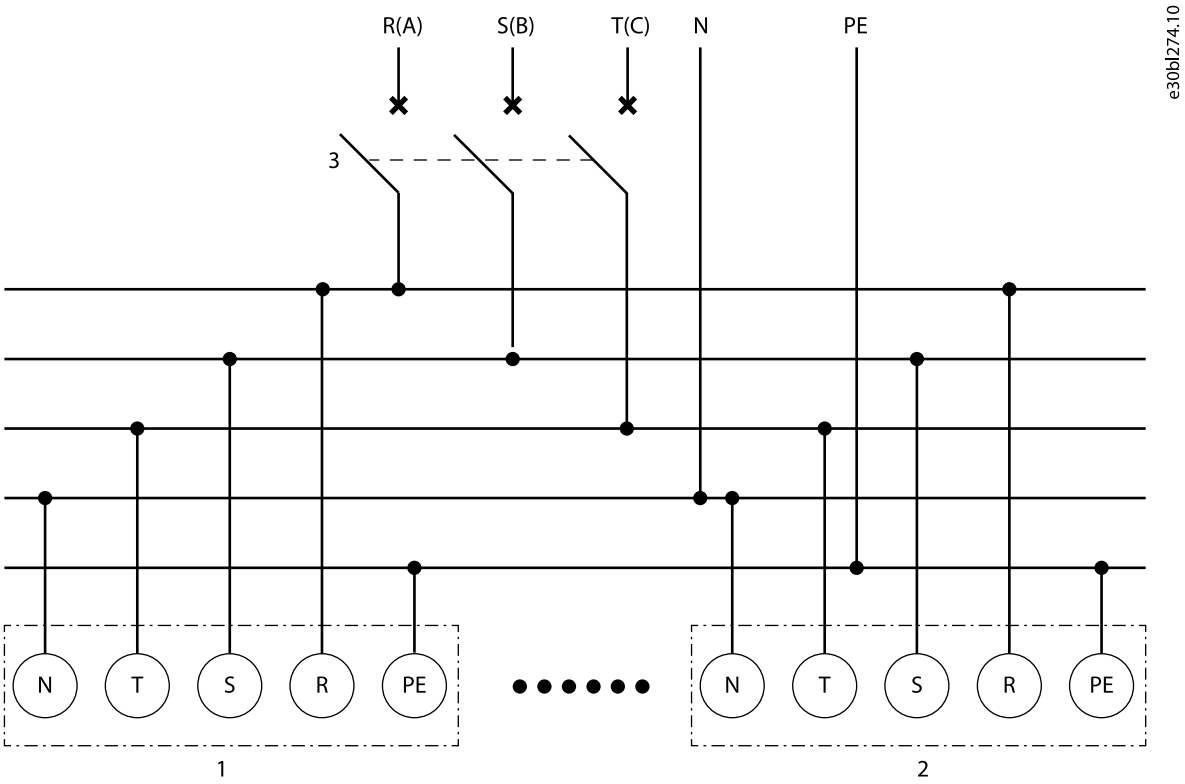

Figure 28: Wiring Diagram, Main Power Cables Connection Active Power Filter Module

1	Module 1 (Back view).	**2**	Module n (Back view).
3	QF (Breaker).		

4. Connect the power wires from the Active Power Filter cabinet power cable terminals to external breaker or feeder.
5. Connect the power wires to the power supply.
6. Check the marking of wires connecting the Active Power Filter module and the CT.

Ensure the wire diameter and phase sequence are correct. Connect the input and output wires of the CT according to single module system, refer to Figure 29.

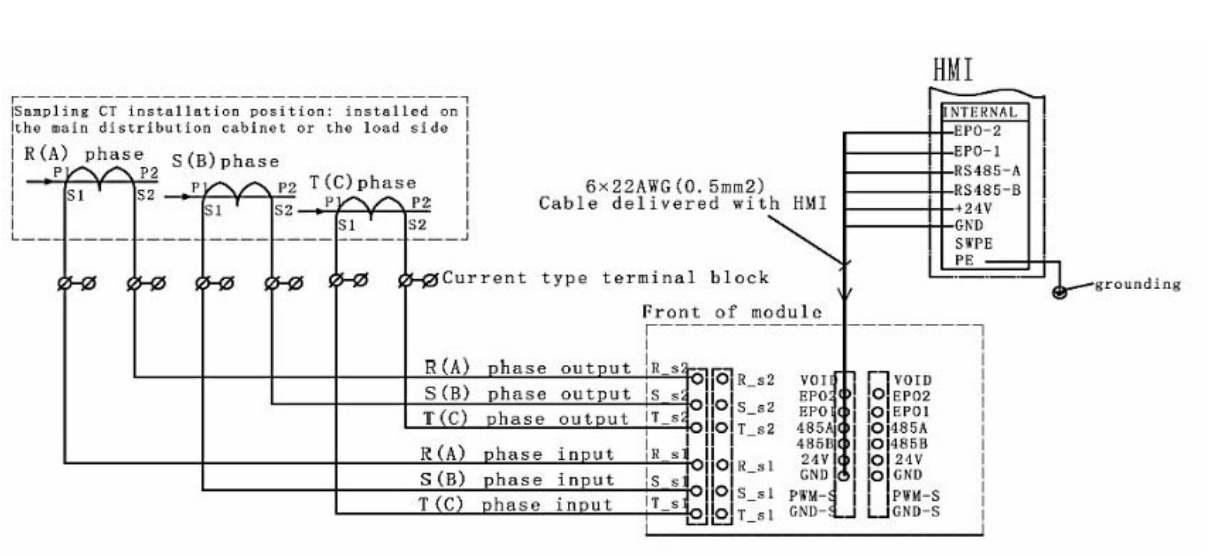

Figure 29: Wiring Diagram, Display, Active Power Filter Module, and CT (Single Module System)

Connect the input and output wires of the CT according to multiple module parallel systems, refer to Figure 30.

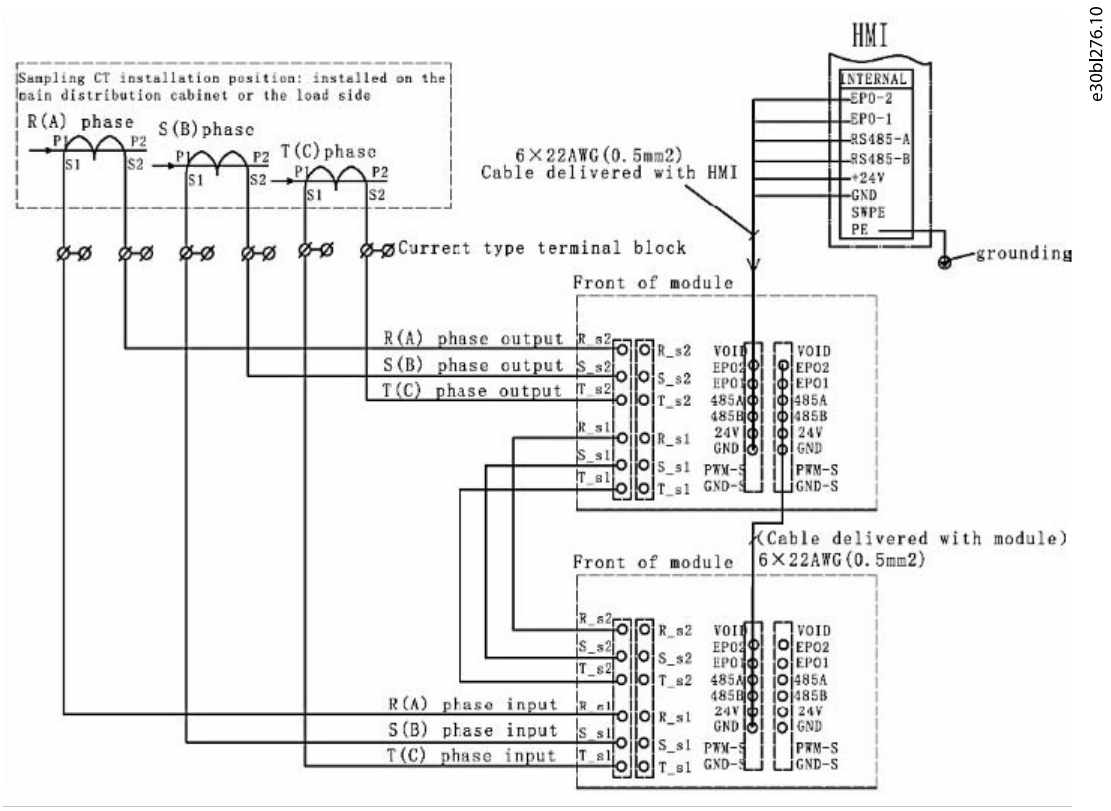

Figure 30: Wiring Diagram, Display, Active Power Filter Module, and CT (Multiple Modules Parallel System)

8.2 Wiring the System Cabinet

NOTICE

The display communication cables are secondary wires. Keep an insulation distance of minimum 100 mm (3.9 in) from the main power cables.

1. Isolate the power before the wiring of the cabinet begin.

   Refer to 2.3 General Safety Precautions and 2.4 Electrical Installation Precautions.

2. Ground the system properly.
3. Install the cable glands in the cabinet.

   Use the cable entry plates provided with the cabinet for cable entries. Remove the cable entry plates before drilling or cutting for cable entries. Use nonferrous gland plated for large single core cables.

4. Comply with the cable gland installation instruction.

   Selection of the cable glands must not compromise the enclosure-required protection rating.

5. Check the diameter and markings on the cabinet input wires, and verify that the wire diameter and phase sequence are correct.

   Refer to Figure 31 to perform wiring and 5.2 Cable Specification for power line specifications.

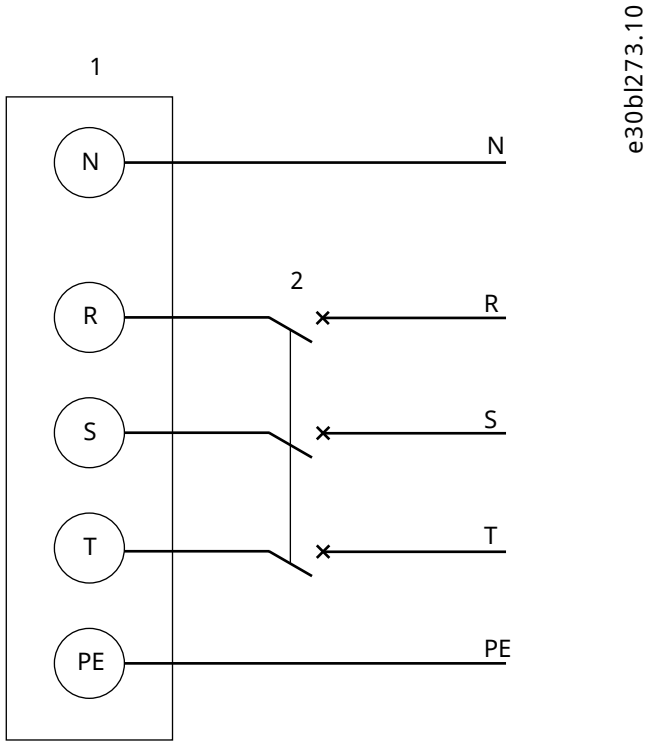

Figure 31: Wiring Diagram, Main Power Cable Connection System Cabinet

1	Power cable terminals, cabinet.	**2**	External breaker or feeder.

6. Connect the power wires from the Active Power Filter cabinet power cable terminals to external breaker or feeder.
7. Connect the power wires to the power supply.

8.3 Wiring Basic CT and Installation

Calculation of the capacity and the maximum 1 way wiring length from the CT to the Active Power Filter, refer to 7.4 Load Current Detection for CT Installation and Wiring.

Locate the CT for current detection on the side of the harmonic source to feed the detection signal to the Active Power Filter.

For open loop, locate the CT for current detection on the side of the harmonic source to feed the detection signal to the Active Power Filter, refer to Figure 32.

For closed loop, locate the CT for current detection on the side of the grid to feed the detection signal to the Active Power Filter, refer to Figure 33.

A set of 3 CTs must be provided for current detection of the harmonic source. The direction of the 3 CTs must be the same.

The phase sequences of the detection signal of the CTs must not be changed.

A Corresponding setting must be set up in accordance with CT wiring under compensation mode, otherwise the compensation is not working.

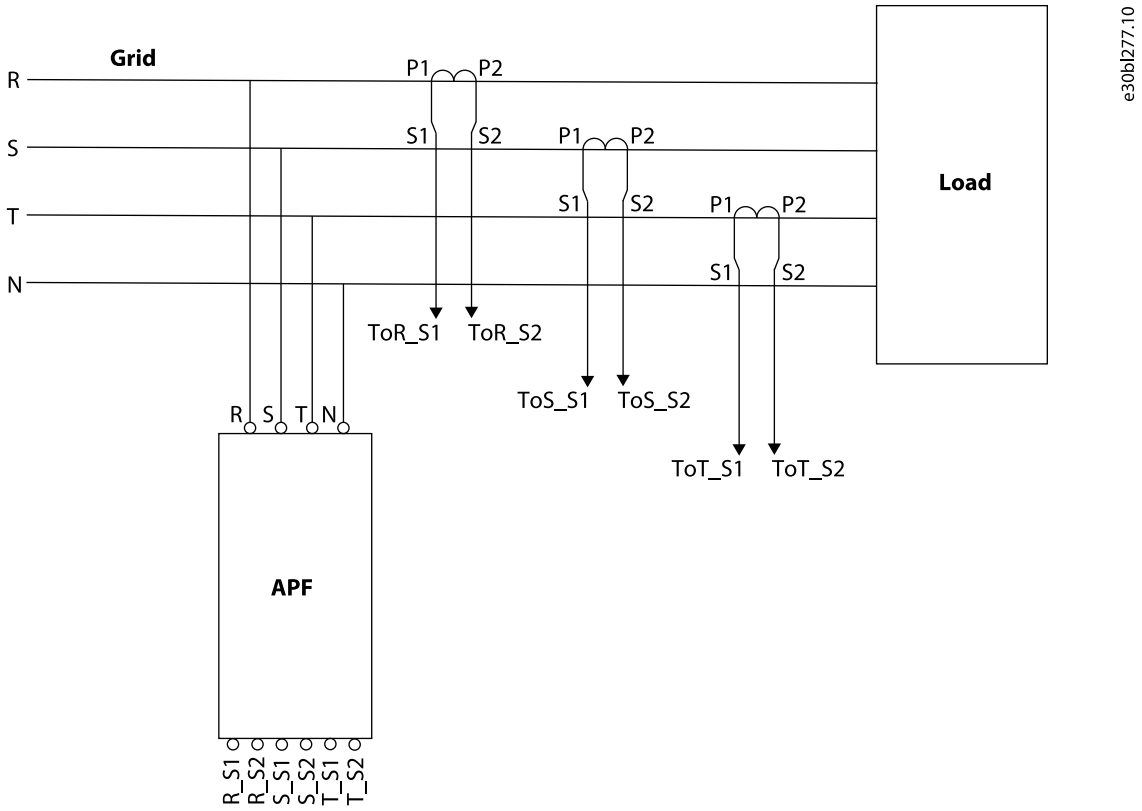

Figure 32: Basic CT Wiring Diagram, Open Loop

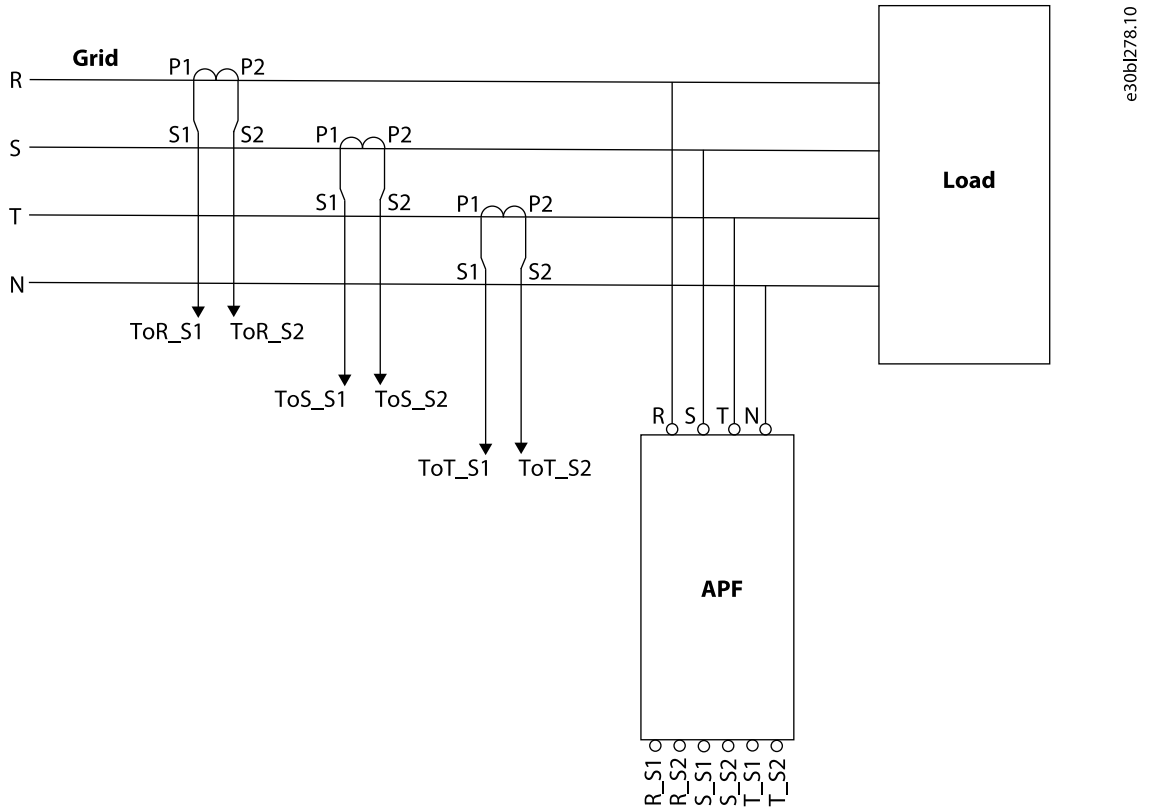

Figure 33: Basic CT Wiring Diagram, Closed Loop

1. Connect the secondary output S1 of CT for R-phase detection to the terminal board R_S1, and connect the S2 outgoing line to the terminal board R_S2.
2. Connect the secondary output S1 of CT for S-phase detection to terminal board S_S1, and connect the S2 outgoing line to the terminal board S_S2.
3. Connect the secondary output S1 of CT for T-phase detection to terminal board T_S1, and connect the S2 outgoing line to terminal board T_S2.

9 Basic Operations and Applications

9.1 Inspection Before Start-up

1. The numbering for system module ID must be the same as the module numbering printed on the side of the system cabinet.
2. The number from the top to the bottom of the system cabinet must be in the sequence of PM0 to PM7.

   The terminal resistance switch for module PM7 is set on the right. The terminal resistance switch for the power module of the display is set on the right. Terminal resistance switches for the other modules are set on the left.
3. Check that the module IDs not are repeated.

   Only for Active Power Filter modules that are connected in parallel and sharing the same display.
4. Check that the Active Power Filter and system cabinet are connected properly and that all screws are tightened.
5. Check that each Active Power Filter modules ID and terminal resistance are set properly.

   The DIP switches used to set the ID and terminal resistance, refer to 9.2 DIP Switch Settings.
6. Ensure that the terminal resistance DIP switch of the Active Power Filter module that locates at the farthest from the display is set to the right.
7. Each module must have an individual IP.
8. Module quantity and compensation capacity are correct.
9. Parallel communication terminals are properly connected.
10. Display communication ports are properly connected.
11. The CT signal cables are properly connected.
12. Front door of the cabinet is closed.
13. Ensure that the Active Power Filter is adjusted to room temperature 20 °C ~ 25 °C (68 °F ~ 77 °F) for more than 1 hour before the start-up can begin.

    Ensuring adjustment to room temperature avoids moisture from condensing inside the unit.

9.2 DIP Switch Settings

DIP switches used to set the ID and terminal resistance, refer to Figure 34, Figure 35, and Table 38.

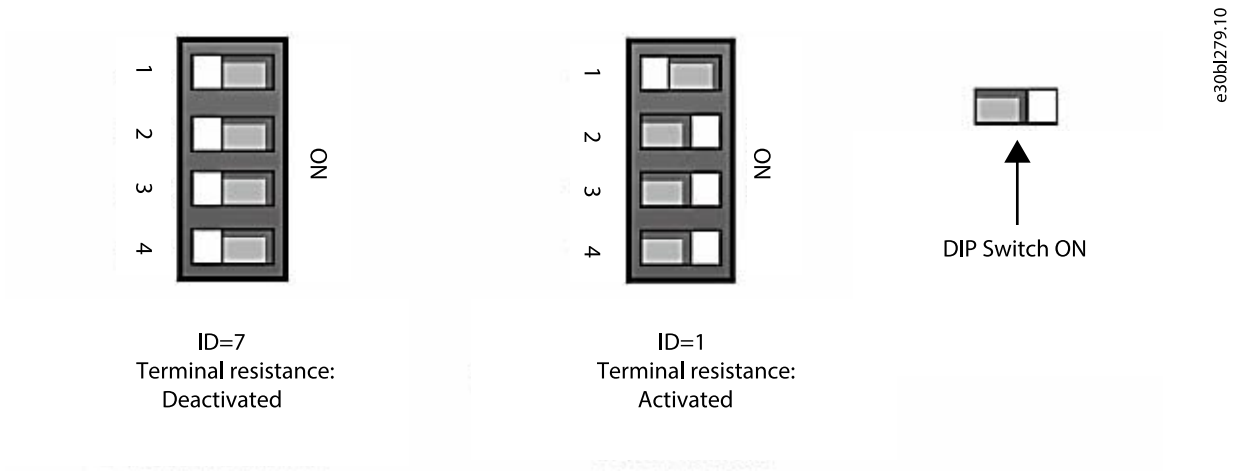

Figure 34: Diagram for DIP Switches

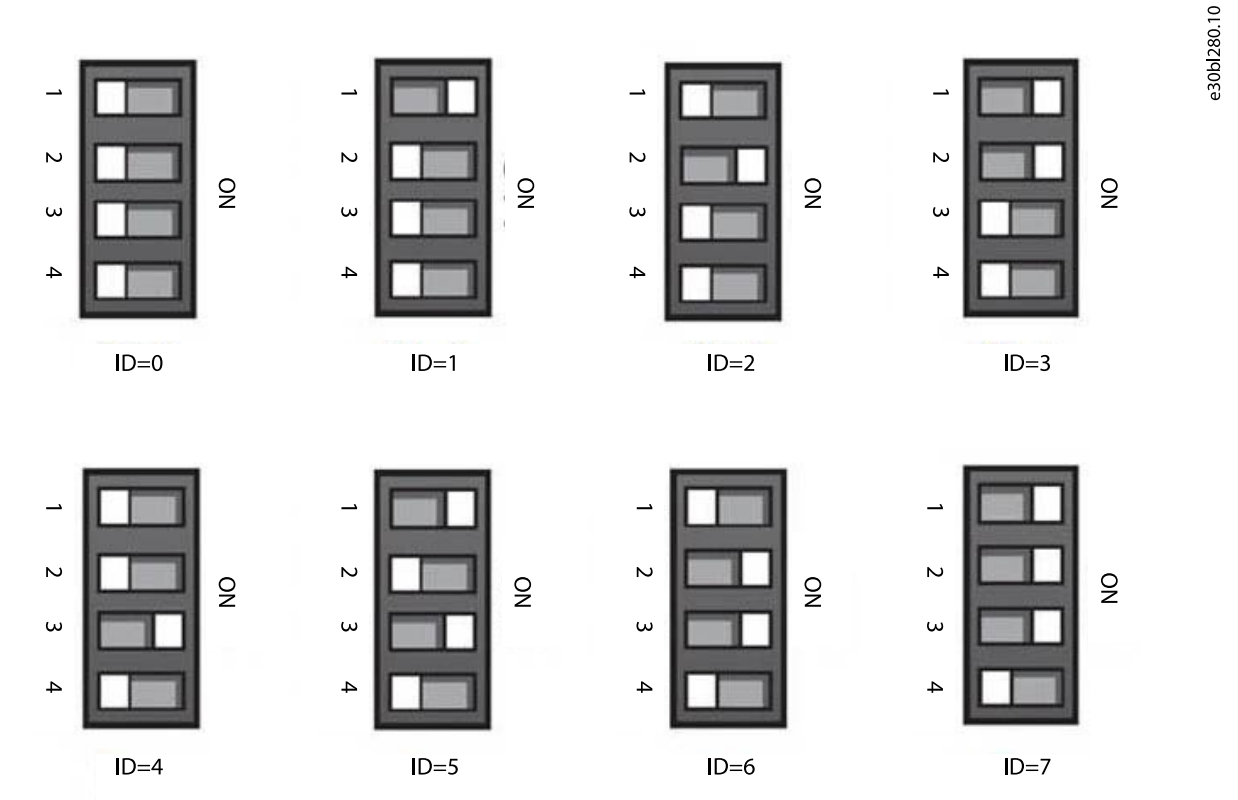

Figure 35: DIP Switch ID0 - ID7

Table 38: Position of DIP Switches

DIP switch	Description
DIP switch 1	Setting of the 1st digit of ID, which is valid when it is slid to right position.
DIP switch 2	Setting of the 2nd digit of ID, which is valid when it is slid to right position.

Table 38: Position of DIP Switches *(continued)*

DIP switch	Description
DIP switch 3	Setting of the 3rd digit of ID, which is valid when it is slid to right position.
DIP switch 4	Setting of terminal resistance, it is activated in right position.

9.3 Start-up Procedure

Review all safety warnings and cautions in 2.3 General Safety Precautions and 2.4 Electrical Installation Precautions before the start-up begin.

The operating temperature for the Active Power Filter is -10 °C ~ 55 °C (14 °F ~ 131 °F). If the operating temperature is not within the range, the Active Power Filter cannot start. Refer to 5.5 Ambient Conditions for detailed information regarding working temperature range.

During operation, the Active Power Filter product generates a certain amount of heat. Ensure that the working environment is equipped with a proper cooling system to dissipate the heat so that the surrounding environment can maintain a normal operating temperature.

1. Switch on the main input breaker.

   The internal auxiliary power supply of the modules is started, and the fans start.

2. Check that the yellow LED indicator in front of the module illuminates.
3. Check that the display shows the start-up interface and begins the communication with the modules.
4. Read the system messages on the display and check if there are any faults.
5. Close the front door.
6. Set the system to operating mode. Refer to 9.4.2 7" HMI Display Functions or 9.4.3 10" HMI Display Functions.
7. Press and hold the ON/OFF button on the display.
8. Press YES when the start-up window appears.

   The system starts up.

9. Check that the green LED indicator on HMI and Active Power Filter modules is on.

   The system works properly.

9.4 Display Settings

9.4.1 Display User Level

The display mainly monitors parameter display, system status, and system settings of the Active Power Filter. The display is available for 2 levels of users.

- Operator/user
- Service engineer

The operator user level is able to view the detailed shown parameters in the measurement page. The service engineer level menu is protected by password, and setting and maintenance pages can only be set and viewed after entering the password by the service engineer.

9.4.2 7" HMI Display Functions

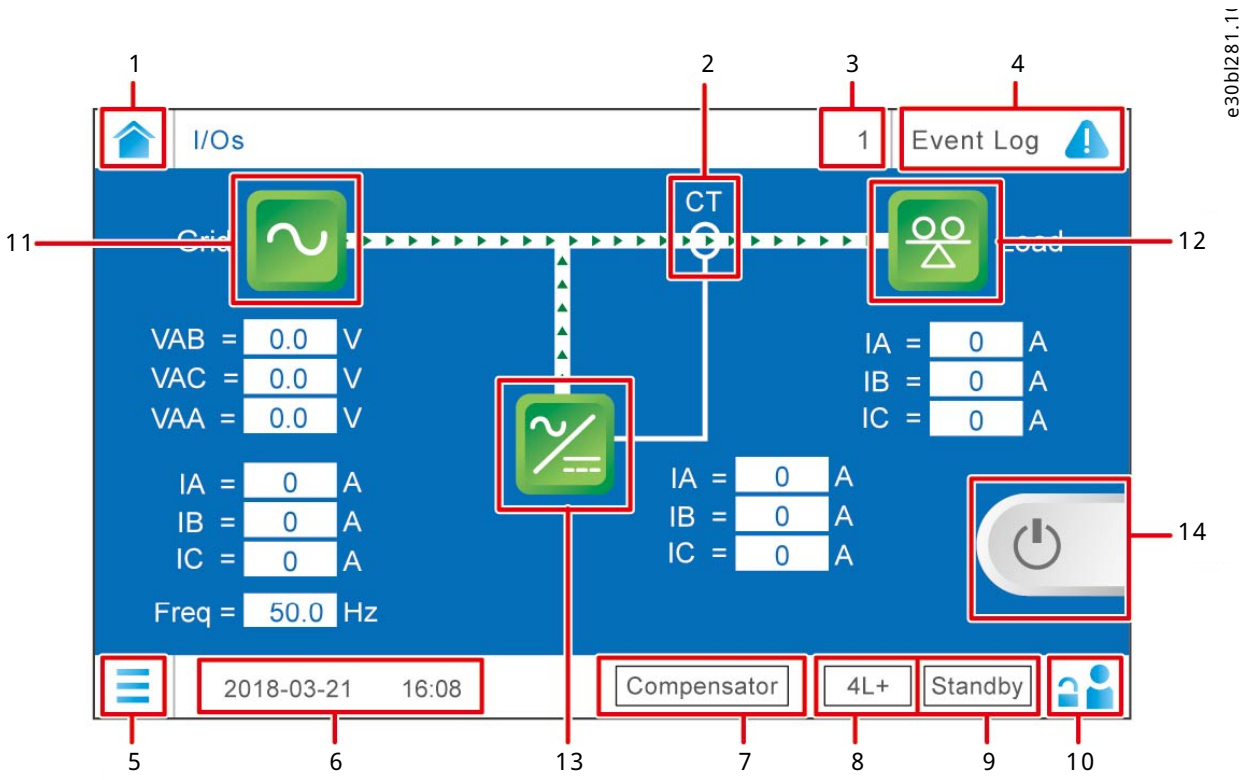

Figure 36: HMI-F Touchscreen, Display Functions

Table 39: Specification of Display Functions

Position number	Description
1	Home button. Click to go back to the home page.
2	CT position setting.
3	Quantity of modules connected to this display.
4	Event log button. Click to go to the event log.
5	Menu button. Click to show the 1st level menu on the HMI.
6	Time and date on the device.
7	Working mode. Ex. compensator, source.
8	Wiring type. 3P3W/3P4W. Indicates voltage sequence. + is positive and - is negative.
9	System status. Run, Standby, ECO, or fault.
10	Login icon. Click to show the login window. Enter user name and password to proceed to the operation of a higher user level.

Table 39: Specification of Display Functions *(continued)*

Position number	Description
11	Grid icon. Click to show the corresponding detailed information.
12	Load icon. Click to show the corresponding detailed information.
13	Compensator icon. Click to show the corresponding detailed information.
14	ON/OFF button. Click to turn on/turnoff the Active Power Filter.

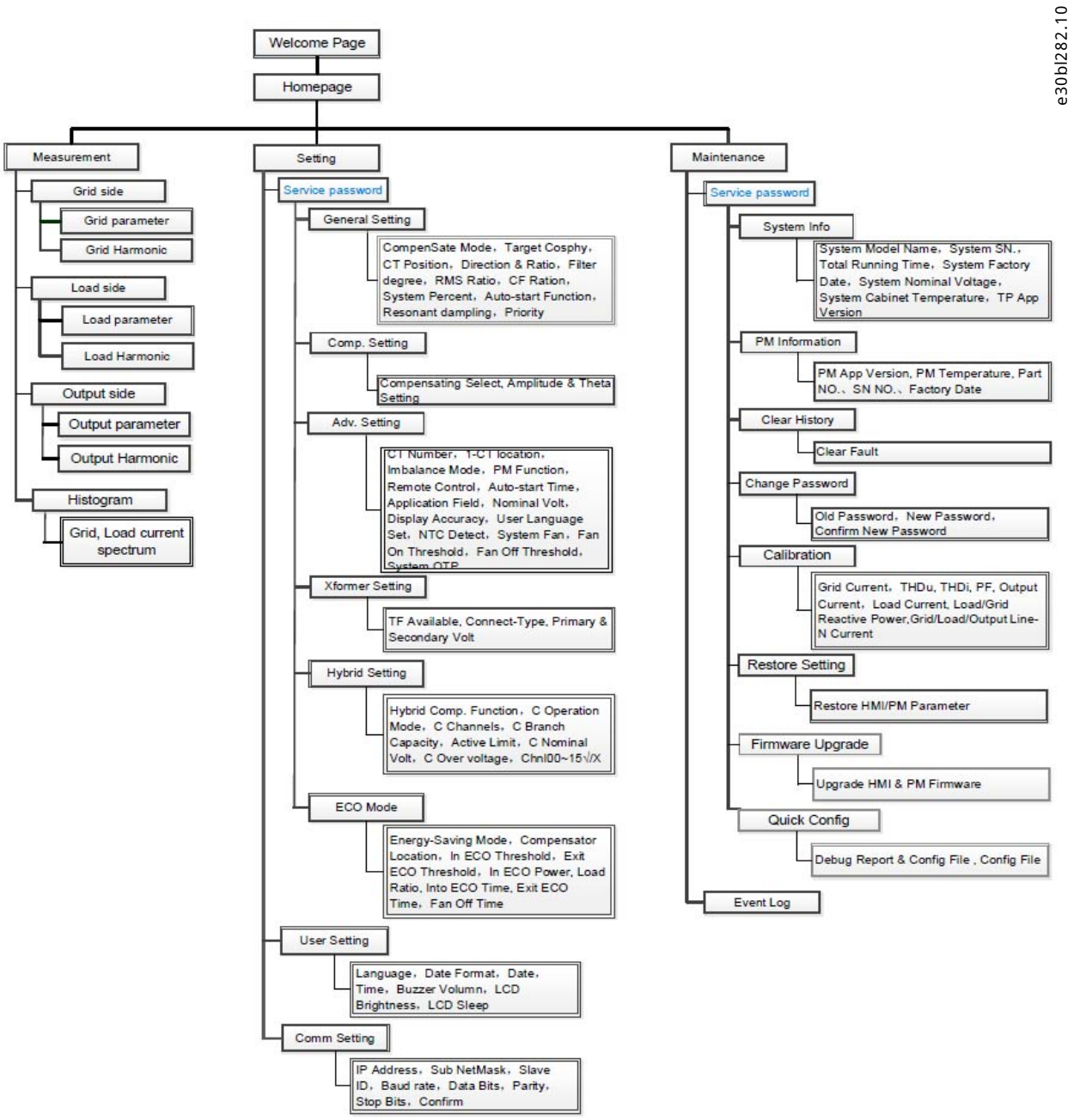

Figure 37: HMI-F Display Hierarchy

9.4.3 10" HMI Display Functions

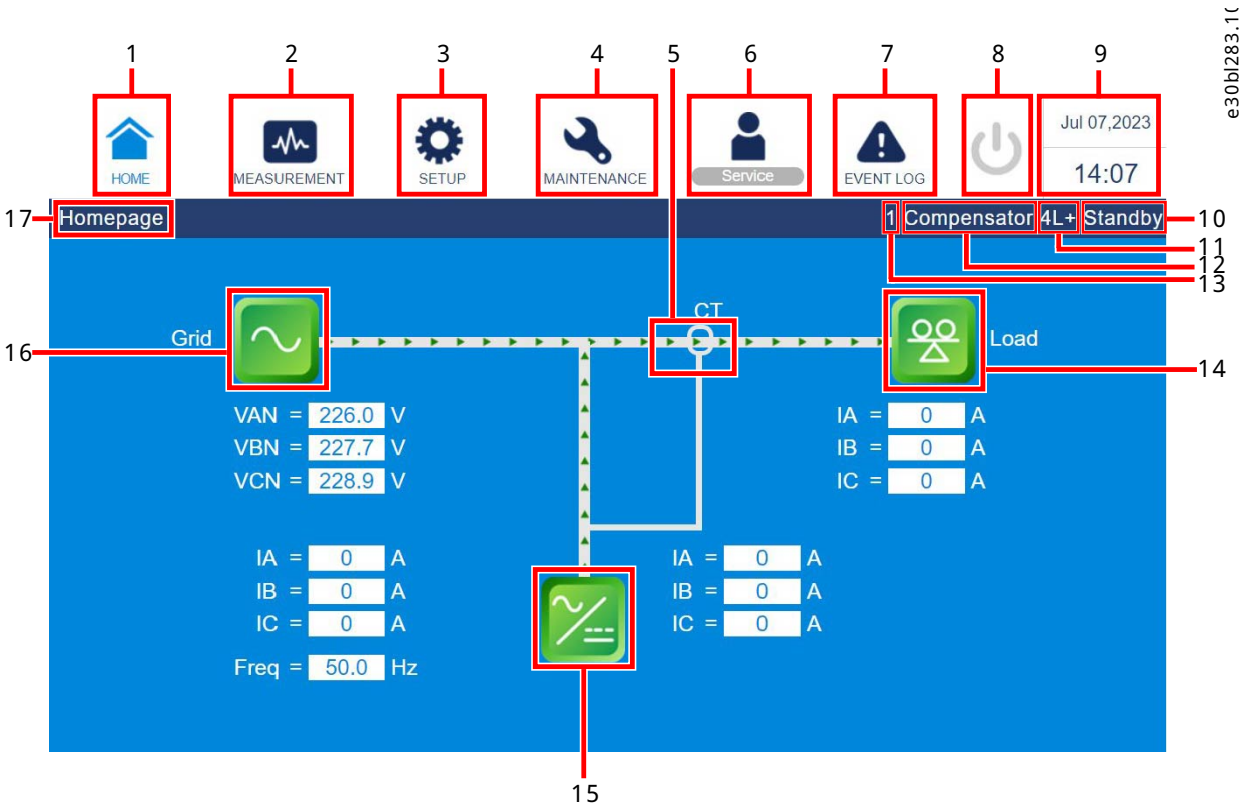

Figure 38: HMI-F10 Touchscreen, Display Functions

Table 40: Specification of Display Functions

Position number	Description
1	Home button. Click to go back to the home page.
2	Measurement button. Click to go to measurement page of the next level.
3	Setup button. Click to go to the setup page of the next level.
4	Maintenance button. Click to go to the maintenance page of the next level.
5	Current CT location. It can be on the grid side or the load side.
6	Login button. Click to log in.
7	Event log button. Click to show all errors on the device.
8	ON/OFF button. Click to turn on/turnoff the Active Power Filter.
9	Time and date on the device.
10	Status. Shows the operating status of the device, including standby, run, and locked.
11	Wiring type. 3P3W/3P4W.
12	Device type, including compensator and harmonic source.

Table 40: Specification of Display Functions *(continued)*

Position number	Description
13	Quantity of modules connected to this display.
14	Load icon. Click to show detailed load measurement information.
15	Compensator icon. Click to show detailed compensator measurement information.
16	Grid icon. Click to show detailed grid measurement information.
17	Page name.

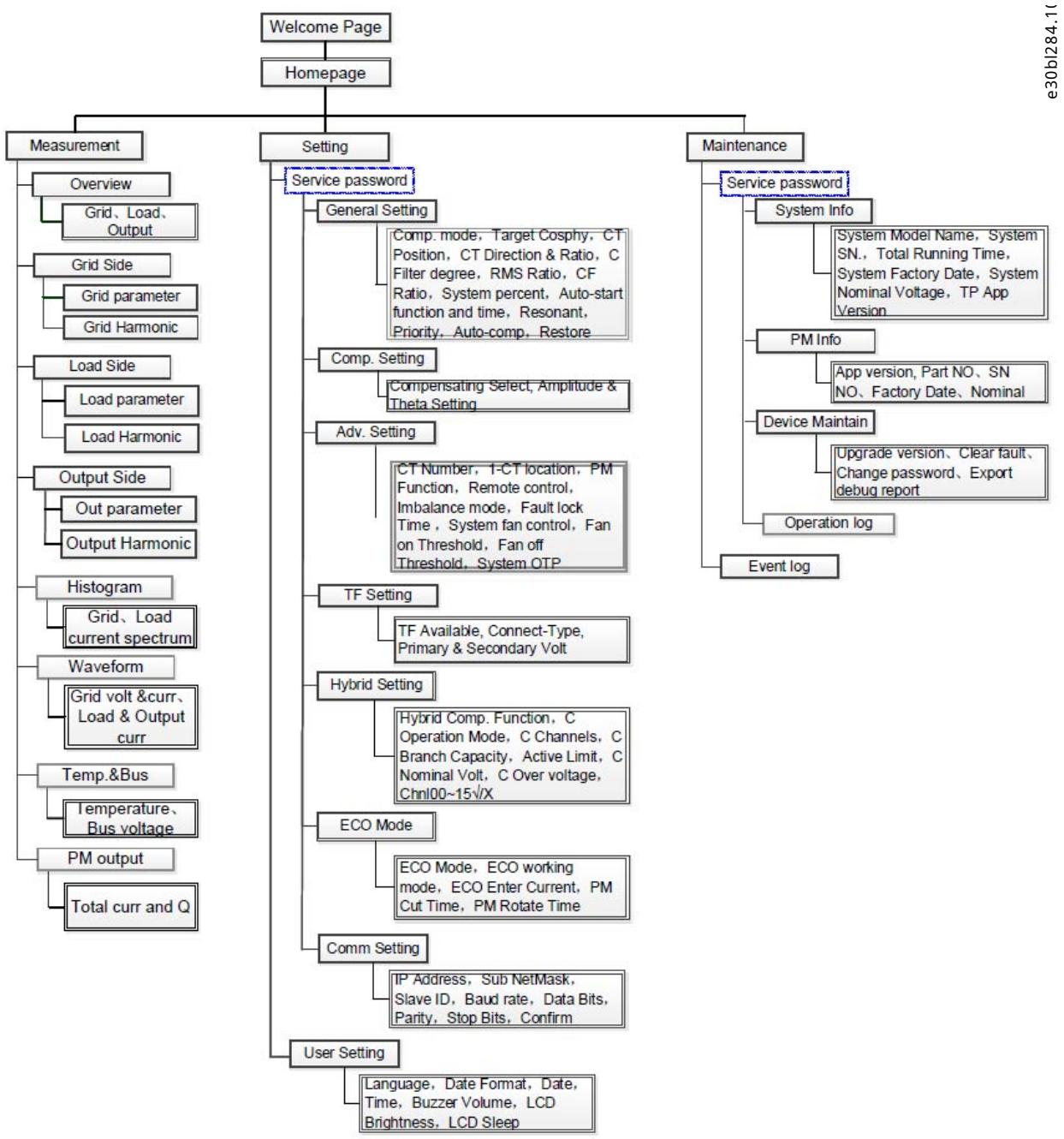

Figure 39: HMI-F10 Display Hierarchy

10 Troubleshooting

10.1 Service and Maintenance

Review all safety warnings and cautions in 2.3 General Safety Precautions and 2.4 Electrical Installation Precautions before the service/maintenance begin

Only qualified service personnel can update the Active Power Filter hardware and firmware.

Regularly clean the Active Power Filter, especially the slits, openings, and filters, to ensure that the air freely flows into the Active Power Filter to avoid overheating. If necessary, use an air blower or vacuum cleaner to clean the slits, and openings and replace the filters regularly to avoid any object from blocking or covering these areas.

Check if all fans work properly when the Active Power Filter is running, and ensure that air can move freely around and through the Active Power Filter. Replace the fan if it is not working properly.

Some components like power capacitors and fans become worn out due to long term usage, and increase the risk of failure on the Active Power Filter.

Contact Danfoss for further information regarding maintenance and service.

10.2 Fault Finding and Troubleshooting

Review all safety warnings and cautions in 2.3 General Safety Precautions and 2.4 Electrical Installation Precautions before the fault finding and troubleshooting begin.

If the filter does not work properly, readout the fault name and investigate possible root causes for the fault.

Table 41: Overview of Faults and Troubleshooting Hints

Fault number	Fault name	Possible fault	Troubleshooting
1	SYS 485 comm loss	1 The communication wire is not well connected. 2 The Active Power Filter modules have repeated IDs.	1 Check if the communication wire is firmly connected. 1 Check the DIP switches of the individual modules.
2	Fuse blowout	The input fuse is broken.	Contact service personnel.
3	Ambient OTP	1 The air vents ate blocked. 2 The fans do not work.	Contact service personnel.
4	BUS OVP/UVP	BUS capacitor failure.	Contact service personnel.
5	Fan Fail	Fan failure.	Contact service personnel.
6	No current compensation/Bad current compensation	The CT is not well connected.	Check if the CT wiring is correct.

10.3 Disposal

Danfoss accepts defective filter modules for disposal.

ENGINEERING
TOMORROW

Danfoss A/S
Ulsnaes 1
DK-6300 Graasten
drives.danfoss.com

Any information, including, but not limited to information on selection of product, its application or use, product design, weight, dimensions, capacity or any other technical data in product manuals, catalog descriptions, advertisements, etc. and whether made available in writing, orally, electronically, online or via download, shall be considered informative, and is only binding if and to the extent, explicit reference is made in a quotation or order confirmation. Danfoss cannot accept any responsibility for possible errors in catalogs, brochures, videos and other material. Danfoss reserves the right to alter its products without notice. This also applies to products ordered but not delivered provided that such alterations can be made without changes to form, fit or function of the product. All trademarks in this material are property of Danfoss A/S or Danfoss group companies. Danfoss and the Danfoss logo are trademarks of Danfoss A/S. All rights reserved.

M0042501