Contents

- Introduction ..... page 2
- How to use the cold plate function ..... page 2
- What is Cold Plate? ..... page 2
- Guidelines ..... page 3
- Heat dissipation ..... page 3
- Heat generating components ..... page 3
- Other conditions influencing the heat dissipation ..... page 4
- Example of a Cold Plate Application ..... page 4
- Example of how to mount a VLT 2800 Cold Plate ..... page 4
- Heat Sink Dimensions ..... page 6

Introduction

The Cold Plate technology of the VLT 2800 series supports the increasing use of automation components that are either placed direct on the machine or in control cabinets close to the application (Decentralisation).

Decentralisation *...reduces costs of cabling and installation*

Decentralisation also provides the possibility of modularising machinery and plants.

Modularisation… *provides flexibility with standard components*

Modularisation makes it possible to maintain flexibility and to use standard components to a very high extent.

Easy service... *less downtime*
The placing of frequency converters and automation equipment in decentral control cabinets makes service easy as the whole cabinet is exchanged. The trouble shooting and fault correction can then be done offline.

High enclosure grade*... for harsh environments*
The robust enclosure makes the drive suited for damp and dusty environments of e.g. paper mills, textile plants and dairies.

The VLT 2800 cold plate can be used together with a standard cabinet. Other automation components can be mounted in the panel as well, making this a flexible solution. Especially for decentralised installations. Cabinet material, surface finish, and enclosure rating can be chosen from the wide range of standard products available locally.

How to use the cold plate function

This instruction implies knowledge of the VLT 2800 hardware.

The data presented are based on tests under realistic conditions. However, as it is not possible to cover all environments please consider the results as a guide. – Should you need any further details please contact your local Danfoss Company.

What is Cold Plate?

Electronic components generate heat that must be removed. The conventional solution is to use natural convection or forced cooling. Natural convection is not the optimum solution for today's small frequency converters; so forced cooling with built-in fan is the preferred solution at present. Now Danfoss introduces solution number three: Cold Plate Technology.

Cold Plate technology makes it possible to have 50-75 % of the heat removed through the rear wall of the unit. For a definition of the cold plate efficiency see figure 1.

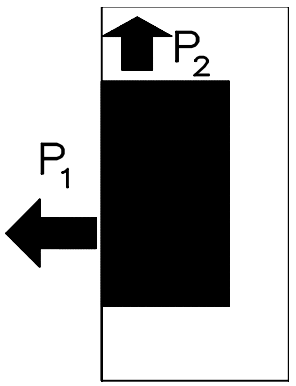

$$\eta = \frac{P_1}{P_1 + P_2}$$

195NA177.10

Figur 1 Definition of cold plate efficiency

It is necessary to add a module that is either based on a liquid cooling medium (e.g. water) or a heat sink for air-cooling. The advantage is that critical components are not overheated when a high enclosure grade is used.

This instruction will only cover heat dissipation through an external heat sink for air-cooling.

The advanced heat sink of VLT 2800 makes it possible to use the unit either as a standard unit or as cold plate. Figure 2 shows an example of a VLT 2800 heat sink. All the heat-generating components are placed on this heat sink making it possible to have the heat removed through the rear wall of the frequency converter. The same standard unit can be used in other installations using normal cooling.

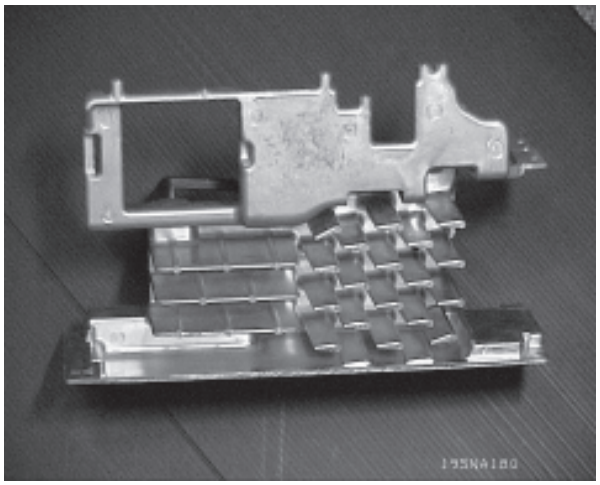

Figure 2 VLT internal heat sink

■ Guidelines

For dimensioning a cold plate application please consider the following:

■ Heat dissipation

With small frequency converters below 1 kW heat disspation through the walls of the cabinet is sufficient. With frequency converters above 1 kW, however extra cooling is necessary.

■ Heat generating components

A frequency converter includes various heat generating components. Figure 3 shows a principle sketch of a VLT 2800 with indication of the primary sources of heat loss. These are: 1) Rectifier 2) DC coil 3) DC capacitor 4) IGBT transistors 5) Switch Mode Current Supply.

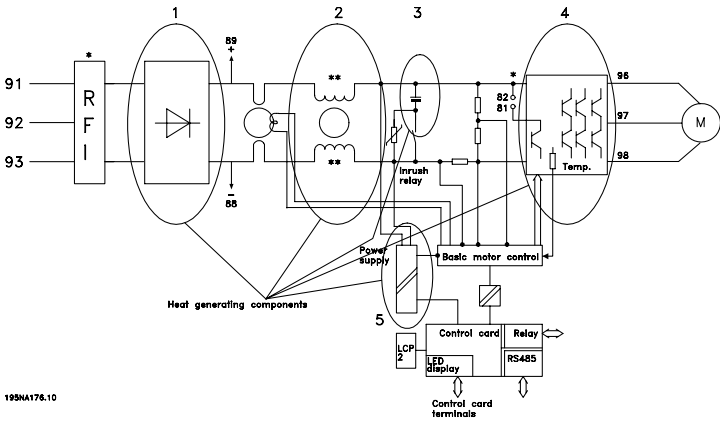

Figure 3 Heat generating components of a frequency converter

1) Rectifier
The loss in the rectifier is direct proportional with the input current and it can be determined as: $P_{rec} = 1.5\ V \cdot I_{in,RMS}$. The loss will therefore typically be between 5 and 10W depending on unit size and load.

2) DC coils
The DC coils mainly generate heat in the form of ohmic losses; $P_{coil} = R_{coil} \cdot I^2_{DC}$. This loss is typically less than 10 W.

3) DC capacitor
The loss in the DC capacitor is caused by the ripple current and the series resistor of the capacitor: $P_{cap} = I^2_{RMS,ripple} \cdot R_{serie}$. Normally this loss can be neglected, as it is less than 2 W.

4) IGBT
The loss in the IGBT transistors is the primary reason for the heat generation in a frequency converter. The losses are mainly dependent on four factors: switch frequency, intermediate circuit voltage, cable length and output current.

5) Switch mode supply
The consumption of the switch mode supply can be considered to be constant. It is typically 20 W.

■ Other conditions influencing the heat transport

- The frequency converter must be mounted on the heat sink with a thermal contact resistance as small as possible. How small it can be will of course depend upon how planar the surfaces are. To improve the thermal contact the frequency converter should be mounted with heat sink paste. Danfoss supplies paste with all heat sinks offered for cold plate applications.

- The amount of heat that you can transport through the cabinet walls and through the heat sink depends on the ambient temperature. The heat sinks recommended by Danfoss are suited for ambient temperatures up to 40°C under the conditions stated in Table I and II. The dimensions of the heat sinks are stated at the end of this instruction.

Table I Recommended maximum output

Heat sink	Recommended maximum output
195N3111	2.2 kW
195N3112	5.5 kW ★

The above recommended maximum outputs can be obtained, on condition that the values of Table II are not exceeded.

Table II Maximum recommended operational conditions

Min. cabinet size	h×w×d=500×400×210 mm
Max. cable length	15 m
Max. switch frequency	4.5 kHz
Max. input voltage	400 V
Max. load	100 %
Max. ambient temperature	40°C

In applications where the values stated are exceeded we recommend to carry out a test to determine the actual amount of heat to be dissipated. The temperature of the IGBT module should not exceed 80°C. You can monitor this temperature from the LCP display.

- If it is not necessary that the enclosure is moisture and water-proof (IPX0), for instance in the textile industry, you can improve the heat dissipation and make the enclosure dust proof by mounting filters at the top and bottom of the cabinet.

■ Example of a Cold Plate Application

The first thing to do when dimensioning a cold plate installation is to determine the heat loss in the cabinet under worst-case operational conditions. See example 1.

The next step is to determine the amount of heat to be dissipated through the cabinet walls and the heat sink respectively.

Cabinet: Most cabinet suppliers can state the output that can be removed through the cabinet walls. A painted steel cabinet of 500x400x210 mm (hxwxd) can remove about 50 W if the temperature difference between cabinet and the environment is 15°C. This corresponds to an internal cabinet temperature of 55°C and an ambient temperature of 40°C.

Heat sink: For the heat conductivity of a specific heat sink please contact the supplier or use the heat sinks recommended by Danfoss.

Example 1:
A VLT 2840 is to be mounted in a cabinet of the size 500x400x210 mm (hxwxd). The total loss is estimated to be 80W during operation. The cabinet can remove 50W, this means that a heat sink that can remove about 30W is required. The temperature difference between heat sink and the environment is 15°C. What is the maximum permitted thermal resistance of the heat sink?
Answer: You will need a heat sink with a thermal resistance that is max: R_{th} = 15/30°C/W = 0.5°C/W

■ Example of how to mount a VLT 2800 Cold Plate

In the following we go through how a VLT 2800 can be mounted in a cold plate application. Figure 4 shows the necessary parts: VLT 2800, heat sink, cabinet, heat sink paste, and screws. Please note that the cabinet is not supplied by Danfoss. Any suitable cabinet can be used.

★ *It is necessary to limit either the ambient temperature, cable length, switch frequency, or mains voltage if a 4 kW drive is loaded beyond 75 %. It is recommended to make a test at the actual conditions.*

Avoid contact between heat sink paste and eyes and skin.



Figure 4 Components for VLT 2800 Cold Plate

First you adapt the cabinet. The best heat dissipation is obtained by cutting a hole in the rear wall that fits the heat sink, as illustrated on Figure 5. See end of this note for physical dimensions of the heat sinks. If required you can also mount other components on the heat sink. At the same time you make holes for cable entries.



Figure 5 Cabinet adaptation

Then apply a layer of heat sink paste on the rear plate of the frequency converter. To ensure the optimum heat conduction take care that the paste is spread evenly on the whole surface. See Figure 6.

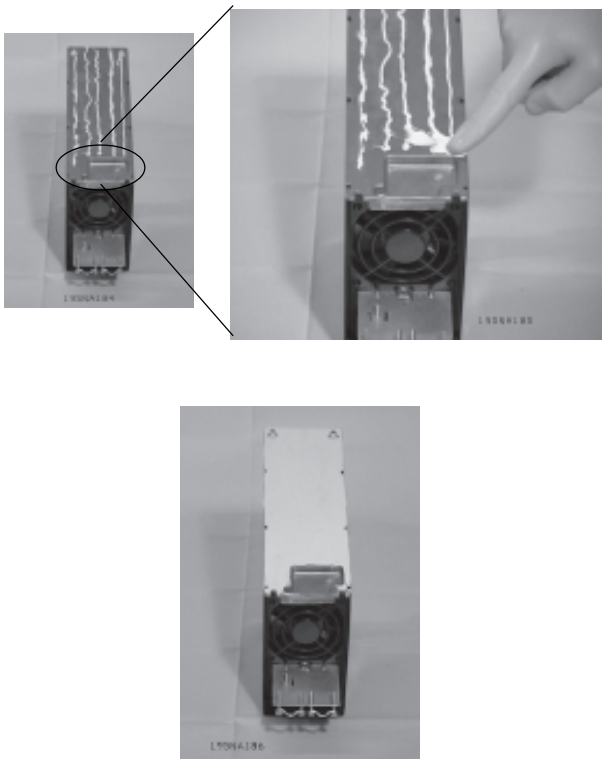

Figure 6 How to spread heat sink paste

Then you mount the heat sink on the cabinet, frequency converter and other components, if any, on the heat sink. The outer edge of the heat sink can be sealed to the cabinet with a gasket or other sealing material. Finally you mount the cables.

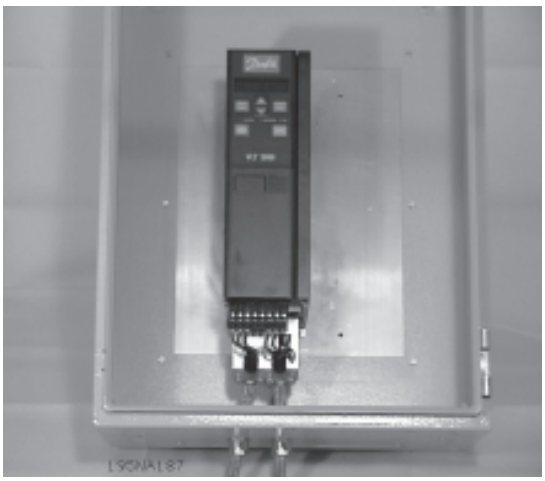

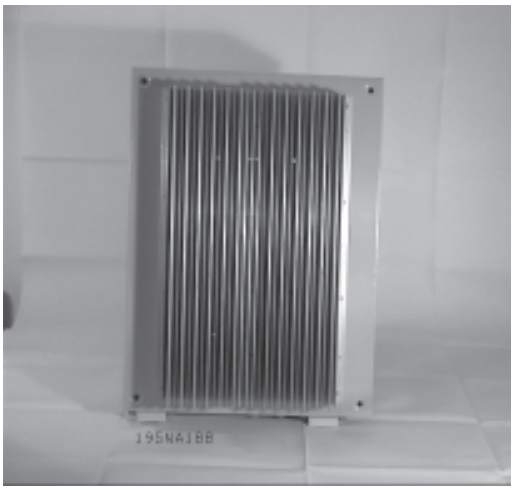

Figure 7 Complete VLT 2800 Cold Plate Installation

■ Heat Sink Dimensions (mm)

195N3111

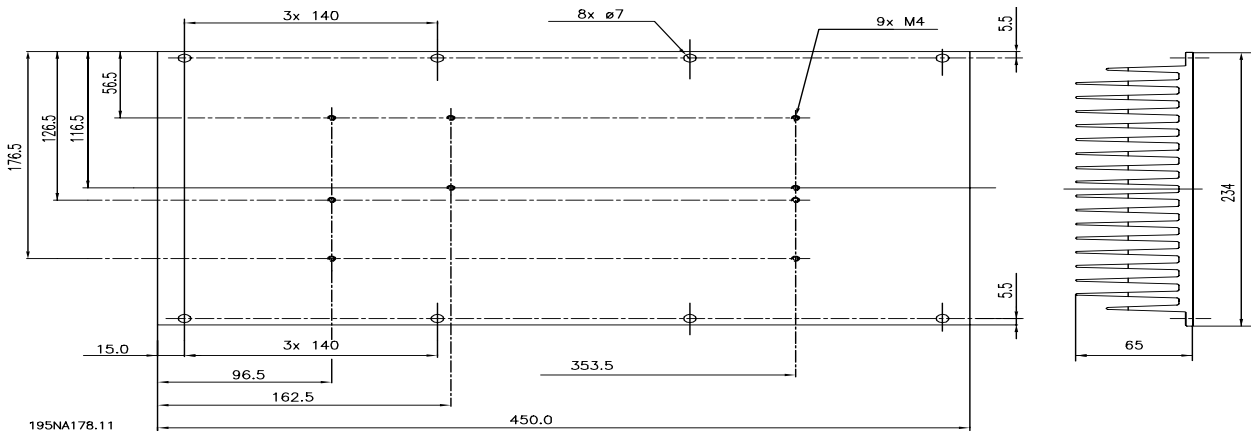

195N3112

