

Operating Instructions

VLT® 2800

Contents

Quick Setup 3
- General warning 3
- Mechanical Installation 3
- Electrical Installation, power 3
- Electrical Installation, control cables 3
- Programming 3
- Motor start 4
- Safety regulations 4
- Warning against unintended start 4

Introduction to VLT 2800 5
- Software version 5
- High voltage warning 6
- These rules concern your safety 6
- Warning against unintended start 6
- Control unit 7
- Manual initialisation 7
- Hand Auto 8
- Automatic motor tuning 9

Programming 10
- Operation & Display 10
- Load and Motor 18
- References & Limits 28
- Inputs and outputs 35
- Special functions 44
- Enhanced Sleep Mode 53

Installation 58
- Mechanical dimensions 58
- Mechanical installation 62
- General information about electrical installation 63
- EMC-correct electrical installation 64
- Electrical installation 65
- Safety clamp 67
- Pre-fuses 67
- Mains connection 67
- Motor connection 68
- RFI switch 68
- Direction of motor rotation 68
- Parallel connection of motors 69
- Motor cables 69
- Motor thermal protection 70
- Brake connection 70
- Earth connection 70
- Load sharing 71
- Tightening Torque, Power Terminals 71

Control of mechanical brake 71
Access to control terminals 71
Electrical installation, control cables 72
Tightening torques, control cables 73
Electrical installation, control terminals 73
Relay connection 73
VLT Software Dialog 73
Connection examples 74

All about VLT 2800 75
Display readout 77
Warnings/alarm messages 77
Warning words, extended status words and Alarmwords 81
Special conditions 82
Aggressive environments 82
Derating for high switching frequency - VLT 2800 83
Temperature-dependent switch frequency 83
Galvanic Isolation (PELV) 83
EMC emission 84
UL Standard 84
General technical data 85
Technical data, mains supply 1 x 220 - 240 V/3 x 200-240V 90
Technical data, mains supply 3 x 380 - 480 V 91
Available literature 92
Supplied with the unit 92

Index 100

Quick Setup

General warning

Using this Quick Setup, you can carry out quick and EMC-correct installation of the frequency converter in five steps. The Operating Instructions, which are also enclosed, give other examples of installation and describe all functions in detail.

Read the safety instructions on this page before installing the unit.

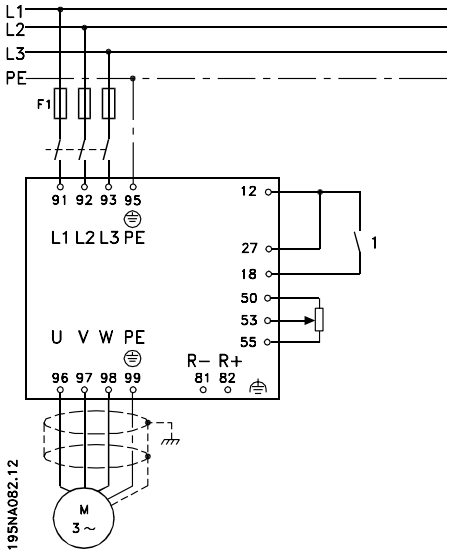

Mechanical Installation

VLT 2800 frequency converters allow side-by-side installation. Because of the need for cooling, there must be 10 cm free air passage above and below the frequency converter. Drill holes in accordance with the measurements given in section *Mechanical dimenstions*. Retighten all four screws.

Fit the decoupling plate to the power cables and the earth screw (terminal 95).

Electrical Installation, power

Please note that the power terminals can be removed. Connect mains to the mains terminals of the frequency converter, i.e. 91, 92, 93 and the earth connection to terminal 95. Fit a screened/armoured cable from the motor to the motor terminals of the frequency converter, i.e. U, V, W. The screen ends in a screen connector.

Electrical Installation, control cables

Remove the front cover underneath the control panel. Place a jumper between terminals 12 and 27.

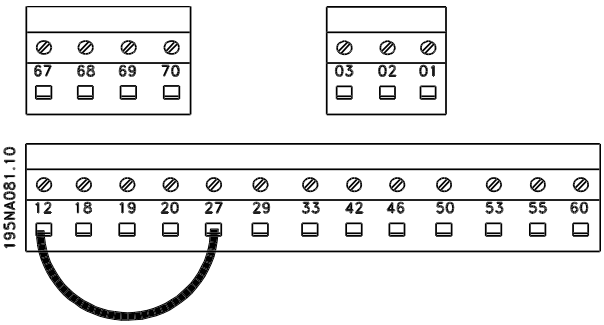

Programming

Carry out programming on the control panel. Press the [QUICK MENU] key to enter the Quick menu. In this menu, parameters can be selected by means of the [+] and [-] keys. The parameter values can be changed by pressing [CHANGE DATA]. Changes are programmed using the [+] and [-] keys. Finish the change of a parameter setting by pressing [CHANGE DATA]. A change of parameter values is saved automatically after a mains failure. If the display shows three dots at the right, the parameter value has more than three digits. In order to see the value, activate [CHANGE DATA]. Press [QUICK MENU]: Set the motor parameters that are on the nameplate of the motor:

Motor power [kW]	parameter 102
Motor voltage [V]	parameter 103
Motor frequency [Hz]	parameter 104
Motor current [A]	parameter 105
Rated motor speed	parameter 106

Activate AMT:

Automatic motor tuning	parameter 107

Set reference range

Min. reference, RefMIN	parameter 204
Max. reference, RefMAX	parameter 205

Ramp-up time [s]	parameter 207
Ramp-down time [s]	parameter 208

In parameter 002 Local/remote control, the frequency converter mode can be selected as Remote operation [0], i.e. via the control terminals, or Local [1], i.e. via the control unit.

Set the control location to Local [1].

Local/remote operation = Local [1] Par. 002

Set the motor speed by adjusting the Local reference

Local reference Parameter 003

Motor start

Press [Start] to start the motor. Set the motor speed by adjusting parameter 003 Local reference.

Check whether the direction of rotation of the motor shaft is clockwise. If not, exchange any two phases on the motor cable. Press [STOP/RESET] to stop the motor. Press [QUICK MENU] to return to display mode. (QUICK MENU] + [+] keys must be pressed simultaneously to give access to all parameters.

Safety regulations



The voltage of the frequency converter can be fatal whenever it is connected to mains. Incorrect installation of the motor or the frequency converter may lead to damage to the equipment, serious personal injury or death.

Consequently, the provisions of this Quick Setup, as well as national and local rules and safety regulations, must be complied with.

Touching the electrical parts may be fatal, even after the equipment has been disconnected from mains: wait at least 4 min.

1. The mains supply to the frequency converter must be disconnected if repair work is to be carried out.
2. The [STOP/RESET] key on the control panel of the frequency converter does not disconnect the mains supply and is thus not to be used as a safety switch.
3. Correct protective earthing of the unit must be established, the user must be protected against supply voltage, and the motor must be protected against overload in accordance with applicable national and local regulations.
4. The earth leakage current is higher than 3.5 mA.
5. Protection against motor overload is not included in the factory setting. If this function is required, set parameter 128 Motor thermal protection to data value ETR Trip or ETR Warning.
6. Check that the mains supply has been disconnected before removing the motor and mains plugs.

Warning against unintended start



The motor can be brought to a stop by means of digital commands, bus commands, references or local stop, while the frequency converter is connected to mains. If personal safety considerations make it necessary to ensure that no unintended start occurs, these stops are not sufficient.
While parameters are being programmed, the motor may start. Consequently, the stop key [STOP/RESET] must always be activated, following which data can be modified.
A motor that has been stopped may start if faults occur in the electronics of the frequency converter, or if a temporary overload, a fault in the supply mains or a fault in the motor connection ceases.



NB!
Indicates something to be noted by the reader.



Indicates a general warning.



Indicates a high-voltage warning.

VLT 2800
Operating Instructions
Software version: 3.1x

This Design Guide can be used for all VLT 2800 Series frequency converters with software version 3.1x.
The software version number can be seen from parameter 640.

Warning

It can be extremely dangerous to touch the electrical parts even when the mains supply has been disconnected.
Also ensure that other voltage inputs are disconnected from load sharing through the DC bus.
Wait at least 4 minutes after the input power has been removed before servicing the drive.

High voltage warning



The voltage of the frequency converter is dangerous whenever the converter is connected to mains. Incorrect fitting of the motor or frequency converter may cause damage to the equipment, serious injury or death. Consequently, it is essential to comply with the instructions in this manual as well as local and national rules and safety regulations.



The Protective Extra Low Voltage (PELV) requirements stated in IEC 61800-5-1 are not fulfilled at altitudes above 2000 m (6562 ft.). For 200V frequency converters the requirements are not fulfilled at altitudes above 5000 m (16 404 ft.). Please contact Danfoss Drives for further information.

These rules concern your safety

1. The frequency converter must be disconnected from the mains if repair work is to be carried out. Check that the mains supply has been disconnected and that the prescribed time has passed before removing motor and mains plugs.
2. The [STOP/RESET] key on the control panel of the frequency converter does not disconnect the equipment from mains and is thus not to be used as a safety switch.
3. The unit must be properly connected to the earth, the user must be protected against the supply voltage and the motor must be protected against overloading pursuant to prevailing national and local regulations.
4. The earth leakage currents are higher than 3.5 mA.
5. Protection against motor overload is not included in the factory setting. If this function is required, set parameter 128 *Motor thermal protection* to data value *ETR trip* or data value *ETR warning*. For the North American market: The ETR functions provide overload protection of the motor, class 20, in accordance with NEC.
6. Do not remove the plugs for the motor - and mains supply while the frequency converter is connected to mains. Check that the mains supply has been disconnected and that the prescribed time has passed before removing motor and mains plugs.
7. Note that the frequency converter has more voltage inputs than L1, L2 and L3 when the DC bus terminals are used. Check that all voltage inputs are disconnected and that the prescribed time has passed before repair work is commenced.

Warning against unintended start

1. The motor can be brought to a stop by means of digital commands, bus commands, references or a local stop, while the frequency converter is connected to mains. If personal safety considerations make it necessary to ensure that no unintended start occurs, these stop functions are not sufficient.
2. While parameters are being changed, the motor may start. Consequently, the stop key [STOP/RESET] must always be activated, following which data can be modified.
3. A motor that has been stopped may start if faults occur in the electronics of the frequency converter, or if a temporary overload or a fault in the supply mains or the motor connection ceases.

Use on isolated mains

See section *RFI Switch* regarding use on isolated mains.

It is important to follow the recommendations regarding installation on IT-mains, since sufficient protection of the complete installation must be observed. Not taking care using relevant monitoring devices for IT-mains may result in damage.

Control unit

On the front of the frequency converter there is a control panel.

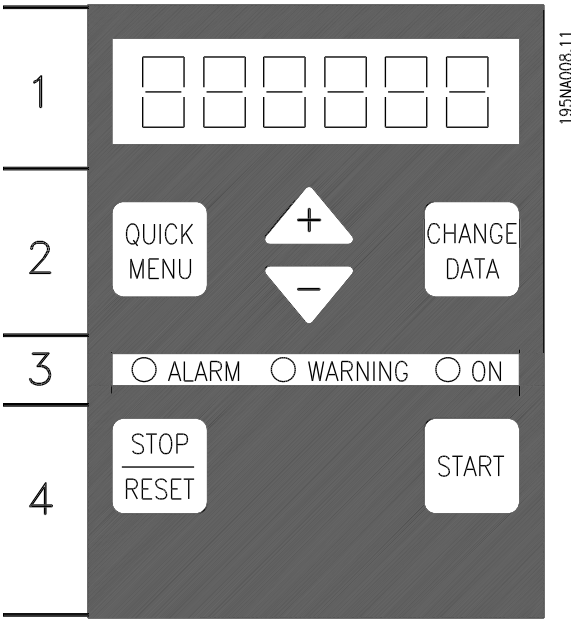

The control panel is divided into four function groups:

1. Six-digit LED display.
2. Keys for changing parameters and shifting display function.
3. Indicator lamps.
4. Keys for local operation.

All displays of data are in the form of a six-digit LED display capable of showing one item of operating data continuously during normal operation. As a supplement to the display, there are three indicator lamps for indication of mains connection (ON), warning (WARNING) and alarm (ALARM). Most of the frequency converter's parameter Setups can be changed immediately via the control panel, unless this function has been programmed as *Locked* [1] via parameter 018 *Lock for data changes*.

Control keys

[QUICK MENU] allows access to the parameters used for the Quick menu.
The[QUICK MENU] key is also used if a change to a parameter value is not to be implemented.
See also [QUICK MENU] + [+].

[CHANGE DATA] is used for changing a setting.
The [CHANGE DATA] key is also used for confirming a change of parameter settings.

[+] / [-] are used for selecting parameters and for changing parameter values.
These keys are also used in Display mode for selecting the display of an operating value.

The **[QUICK MENU] + [+]** keys must be pressed at the same time to give access to all parameters. See *Menu mode.*

[STOP/RESET] is used for stopping the connected motor or for resetting the frequency converter after a trip.
Can be selected as *Active* [1] or *Not active* [0] via parameter 014 *Local stop/reset*. In Display mode, the display will flash if the stop function is activated.

NB!
If the [STOP/RESET] key is set at *Not active* [0] in parameter 014 *Local stop/reset,* and there is no stop command via the digital inputs or serial communication, the motor can only be stopped by disconnecting the mains voltage to the frequency converter.

[START] is used for starting the frequency converter. It is always active, but the [START] key cannot override a stop command.

Manual initialisation

Disconnect mains voltage. Hold the [QUICK MENU] + [+] + [CHANGE DATA] keys down while simultaneously reconnecting the mains voltage. Release the keys; the frequency converter has now been programmed for the factory setting.

■ Display readout states

Display mode



In normal operation, one item of operating data can be displayed continuously at the operator's own choice. By means of the [+/-] keys the following options can be selected in Display mode:

- Output frequency [Hz]
- Output current [A]
- Output voltage [V]
- Intermediate circuit voltage [V]
- Output power [kW]
- Scaled output frequency f_{out} x p008

Menu mode

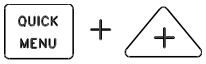

In order to enter the Menu mode [QUICK MENU] + [+] must be activated at the same time.
In Menu mode, most of the frequency converter parameters can be changed. Scroll through the parameters using the [+/-] keys. While scrolling in the Menu mode proceeds, the parameter number will flash.



The display shows that the setting in parameter 102 *Motor power $P_{M,N}$* is 0.75. In order to change the value of 0.75, [CHANGE DATA] must first be activated; the parameter value can then be changed using the [+/-] keys.



If for a given parameter the display shows three dots at the right, it means that the parameter value has more than three digits. In order to see the value, activate [CHANGE DATA].



The display shows that in parameter 128 *Motor thermal protection* the selection made is *Thermistor trip* [2].

Quick menu

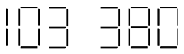

Using the [QUICK MENU] key, it is possible to access the 12 most important parameters of the frequency converter. After programming, the frequency converter is in most cases ready for operation. When the [QUICK MENU] key is activated in Display mode, the Quick menu starts. Scroll through the quick menu using the [+/-] keys and change the data values by first pressing [CHANGE DATA] and then changing the parameter value with the [+/-] keys.
TheQuick menu parameters are:

- Par. 100 *Configuration*
- Par. 101 *Torque characteristic*
- Par. 102 *Motor power $P_{M,N}$*
- Par. 103 *Motor voltage $U_{M,N}$*
- Par. 104 *Motor frequency $f_{M,N}$*
- Par. 105 *Motor current $I_{M,N}$*
- Par. 106 *Rated motor speed $n_{M,N}$*
- Par. 107 *Automatic motor adaptation*
- Par. 202 *Output frequency high limit f_{MAX}*
- Par. 203 *Reference range*
- Par. 204 *Minimum reference Ref_{MIN}*
- Par. 205 *Maximum reference Ref_{MAX}*
- Par. 207 *Ramp-up time*
- Par. 208 *Ramp-down time*
- Par. 002 *Local/remote operation*
- Par. 003 *Local reference*

Parameter 102 - 106 can be read out from the motor's nameplate.

■ Hand Auto

During normal operation the frequency converter is in Auto mode, where the reference signal is given externally, analog or digital via the control terminals. However, in Hand mode, it is possible to give the reference signal locally via the control panel.

On the control terminals, the following control signals will remain active when Hand mode is activated:

- Hand Start (LCP2)
- Off Stop (LCP2)
- Auto Start (LCP2)

- Reset
- Coasting Stop Inverse
- Reset and Coasting Stop Inverse
- Quick Stop Inverse
- Stop Inverse
- Reversing
- DC Braking Inverse
- Setup Select LSB
- Setup Select MSB
- Thermistor
- Precise Stop Inverse
- Precise Stop/Start
- Jog
- Stop Command Via Serial Comm.

Switching between Auto- and Hand mode:
By activating the [Change Data] key in [Display Mode], the display will indicate the mode of the frequency converter.

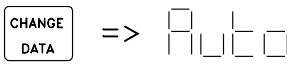

Scroll up/down in order to switch to Hand mode:

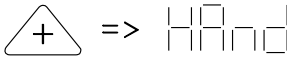

When the frequency converter is in Hand mode the readout will be like:



and the reference can be changed by using the following keys:

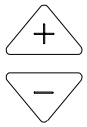

NB!
Please note, that parameter 020 may block the choice of mode.

Automatic motor tuning
Automatic motor tuning (AMT) is performed as follows:

1. In parameter 107 *Automatic motor tuning* select data value [2]. “107” will now flash, and “2” will not flash.
2. AMT is activated by pressing start. “107” will now flash and dashes will move from left to right in the data value field.
3. When “107” appears once more with the data value [0], AMT is complete. Press [STOP/RESET] to save the motor data.
4. “107” will then continue to flash with the data value [0]. You can now proceed.

NB!
VLT 2880-2882 do not have AMT function.

■ Operation & Display

001 Language
(language)

Value:

★ English (english)	[0]
German (deutsch)	[1]
French (francais)	[2]
Danish (dansk)	[3]
Spanish (espanol)	[4]
Italian (italiano)	[5]

Function:

This parameter is used to choose the language to be shown in the display whenever the LCP control unit is connected.

Description of choice:

There is a choice of the languages shown. The factory setting may vary.

---

002 Local/remote operation
(OPERATION SITE)

Value:

★ Remote operation (REMOTE)	[0]
Local operation (LOCAL)	[1]

Function:

There is a choice of two different modes of operation of the frequency converter; *Remote operation* [0] or *Local operation* [1]. See also parameter 013 *Local control* if *Local operation* [1] is selected.

Description of choice:

If *Remote operation* [0] is selected, the frequency converter is controlled via:

1. the control terminals or via serial communication.
2. the [START] key. This cannot, however, override stop commands transmitted via the digital inputs or via serial communication.
3. the [STOP/RESET] and [JOG] keys, on the condition that these are active.

If *Local operation* [1], is selected, the frequency converter is controlled via:

1. the [START] key. This cannot, however, override stop commands via the digital inputs (see parameter 013 *Local control*).
2. the [STOP/RESET] and [JOG] keys, on the condition that these are active.
3. the [FWD/REV] key, on the condition that is has been selected as active in parameter 016 *Local reversing*, and that parameter 013 *Local control* is set at *Local control and open loop* [1] or *Local control as parameter 100* [3]. Parameter 200 *Output frequency range* is set at *Both directions*.
4. parameter 003 *Local reference* where the reference can be set using the [+] and [-] keys.
5. an external control command that can be connected to the digital inputs (see parameter 013 *Local control*).

NB!
The [JOG] and [FWD/REV] keys are located on the LCP control unit.

---

003 Local reference
(LOCAL REFERENCE)

Value:

Par. 013 *Local control* must be set to [1] or [2]:
0 - f_{MAX} (par. 205) ★ 50 Hz
Par. 013 *Local control* must be set to [3] or [4].
Ref_{MIN} - Ref_{MAX} (par. 204-205) ★ 0,0

Function:

In this parameter, the local reference can be set manually. The unit of the local reference depends on the configuration selected in parameter 100 *Configuration*.

Description of choice:

In order to protect the local reference, parameter 002 *Local/remote operation* must be set to *Local operation* [1]. Local reference cannot be set via serial communication.

★ = factory setting, () = display text, [] = value for use in communication via serial communication port

004 Active Setup
(active Setup)

Value:

Factory Setup (FACTORY SETUP)	[0]
★ Setup 1 (setup 1)	[1]
Setup 2 (setup 2)	[2]
Setup 3 (setup 3)	[3]
Setup 4 (setup 4)	[4]
Multi Setup (MULTI SETUP)	[5]

Function:

The active parameter Setup is selected here. All parameters can be programmed in four individual parameter Setups. Shifts between Setups can be made in this parameter via a digital input or via serial communication.

Description of choice:

Factory Setup [0] contains the factory-set parameter values. *Setup 1-4* [1]-[4] are four individual Setups which can be selected as required. *Multi Setup* [5] is used where remote-controlled shifts between the four Setups via a digital input or via serial communication is required.

---

005 Programming Setup
(EDIT SETUP)

Value:

Factory Setup (FACTORY SETUP)	[0]
Setup 1 (setup 1)	[1]
Setup 2 (setup 2)	[2]
Setup 3 (setup 3)	[3]
Setup 4 (setup 4)	[4]
★ Active Setup (ACTIVE SETUP)	[5]

Function:

You can select which Setup you want to programme during operation (applies both via the control panel and the serial communication port). It is, for example, possible to programme *Setup 2* [2], while the active Setup is set to *Setup 1* [1] in parameter 004 *Active Setup* .

Description of choice:

Factory Setup [0] contains the factory-set data and can be used as a source of data if the other Setups are to be reset to a known status. *Setup 1-4* [1]-[4] are individual Setups that can be programmed freely during operation. If *Active Setup* [5] is selected, the programming Setup will be equal to parameter 004 *Active Setup*.



NB!
If data is modified or copied to the active Setup, the modifications have an immediate effect on the unit's operation.

---

006 Setup copying
(SETUP COPY)

Value:

★ No copying (NO COPY)	[0]
Copy to Setup 1 from # (COPY TO SETUP 1)	[1]
Copy to Setup 2 from # (COPY TO SETUP 2)	[2]
Copy to Setup 3 from # (COPY TO SETUP 3)	[3]
Copy to Setup 4 from # (COPY TO SETUP 4)	[4]
Copy to all Setups from # (copy to all)	[5]

Function:

You can copy from the selected active Setup in parameter 005 *Programming setup* to the selected Setup or Setups in this parameter.



NB!
Copying is only possible in Stop (motor stopped in connection with a stop command).

Description of choice:

Copying begins when the required copying function has been selected and the [OK]/[CHANGE DATA] key has been pushed. The display indicates when copying is in progress.

---

007 LCP copy
(LCP COPY)

Value:

★ No copying (NO COPY)	[0]
Upload all parameters (UPL. ALL PAR.)	[1]
Download all parameters (DWNL. ALL PAR.)	[2]
Download size-independent parameters (DWNL.OUTPIND.PAR.)	[3]

★ = factory setting, () = display text, [] = value for use in communication via serial communication port

Function:

Parameter 007 *LCP copy* is used if you want to use the LCP 2 control panel's integral copy function. The function is used if you want to copy all parameter setups from one frequency converter to another by moving the LCP 2 control panel.

Description of choice:

Select *Upload all parameters* [1] if you want all parameter values to be transferred to the control panel. Select *Download all parameters* [2] if all parameter values transferred are to be copied to the frequency converter to which the control panel is attached. Select *Download size-independent par.* [3] if you only want to downloade the size-independent parameters. This is used when downloading to a frequency converter with a different rated power size than that from which the parameter setup originates.



NB!
Upload/download can only be performed in stop mode. Download can only be performed to a frequency converter with the same software version number, see parameter 626 *Database identification no.*

---

008 Display scaling of output frequency (FREQUENCY SCALE)

Value:

0.01 - 100.00 ★ 1.00

Function:

In this parameter, the factor is selected by which the output frequency is to be multiplied. The value is shown in the display, provided parameters 009-012 *Display readout* have been set to *Output frequency x scaling* [5].

Description of choice:

Set the required scaling factor.

---

009 Large display readout (DISPLAY LINE 2)

Value:

No readout (none) [0]
Resulting reference [%] (reference [%]) [1]
Resulting reference [unit] (reference [unit]) [2]
Feedback [unit] (feedback [unit]) [3]
★ Frequency [Hz] (Frequency [Hz]) [4]
Output frequency x scaling (frequency x scale) [5]
Motor current [A] (Motor current [A]) [6]
Torque [%] (Torque [%]) [7]
Power [kW] (Power [kW]) [8]
Power [HP] (Power [HP][US]) [9]
Motor voltage [V] (Motor voltage [V]) [11]
DC link voltage [V] (DC link voltage [V]) [12]
Thermal load motor [%] (Motor thermal [%]) [13]
Thermal load [%] (FC. thermal[%]) [14]
Running hours [Hours] (RUNNING HOURS]) [15]
Digital input [Bin] (Digital input[bin]) [16]
Analog input 53 [V] (analog input 53 [V]) [17]
Analog input 60 [mA] (analog input 60 [mA]) [19]
Pulse reference [Hz] (Pulse ref. [Hz]) [20]
External reference [%] (external ref. [%]) [21]
Status word [Hex] (Status word [hex]) [22]
Heatsink temperature [°C] (Heatsink temp [°C]) [25]
Alarm word [Hex] (Alarm word [hex]) [26]
Control word [Hex] (Control word [Hex]) [27]
Warning word [Hex] (warning word [Hex]) [28]
Extended status word [Hex] (Ext. status [hex]) [29]
Communication option card warning (COMM OPT WARN [HEX]) [30]
Pulse count (PULSE COUNTER) [31]

Function:

In this parameter you can select the data value that you wish to display in the LCP 2 control unit display line 2 when the frequency converter is switched on. The display will also be included in the scrollbar in display mode. In parameters 010-012 *Display readout* you

★ = factory setting, () = display text, [] = value for use in communication via serial communication port

can select a further three data values, which are displayed in display line 1.

Description of choice:

No readout can only be selected in parameters 010-012 *Small display readout*.

Resulting reference [%] gives, as a percentage, the resulting reference in the range from Minimum reference, Ref_{MIN} to Maximum reference, Ref_{MAX}.

Reference [unit] gives the resulting reference with unit Hz in *Open loop*. In *Closed loop* the reference unit is selected in parameter 416 *Process units*.

Feedback [unit] gives the resulting signal value using the unit/scaling selected in parameter 414 *Minimum feedback, FB_{LOW}*, 415 *Maximum feedback, FB_{HIGH}* and 416 *Process units*.

Frequency [Hz] gives the output frequency of the frequency converter.

Output frequency x scaling [-] equals the present output frequency f_M multiplied by the factor set in parameter 008 *Display scaling of output frequency* .

Motor current [A] gives the phase current of the motor measured as an effective value.

Torque [%] denotes the motor's present load in relation to the motor's rated torque.

Power [kW] gives the present power that the motor is absorbing in kW.

Power [HP] gives the present power that the motor is absorbing in HP.

Motor voltage[V] gives the voltage supplied to the motor.

DC link voltage [V] gives the intermediate circuit voltage of the frequency converter.

Thermal load motor [%] gives the calculated/estimated load on the motor. 100 % is the cut-out limit.

Thermal load [%] gives the calculated/estimated thermal load on the frequency converter. 100 % is the cut-out limit.

Running hours [Hours] gives the number of hours that the motor has tun since the last reset in parameter 619 *Reset of running hours counter*.

Digital input [Binary code] gives the signal status from the 5 digital inputs (18, 19, 27, 29 and 33). Terminal 18 corresponds to the bit on the extreme left. `0' = no signal, `1' = signal connected.

Analog input 53 [V] gives the voltage value of terminal 53.

Analog input 60 [mA] gives the present value of terminal 60.

Pulse reference [Hz] gives the reference in Hz connected to terminal 33.

External reference [%] gives the sum of external references as a percentage (sum of analogue/pulse/serial communication) in the range from Minimum reference, Ref_{MIN} to Maximum reference, Ref_{MAX}.

Status word [Hex] gives one or several status conditions in a Hex code. See *Serial communication* in the *VLT 2800 Design Guide* for further information.

Heatsink temp.[°C] gives the present heatsink temperature of the frequency converter. The cut-out limit is 90-100°C, while cutting back in occurs at 70 ± 5°C.

Alarm word [Hex] gives one or several alarms in hex code. See *Serial communication* in the *VLT 2800 Design Guide* for further information.

Control word [Hex] gives the control word for the frequency converter. See *Serial communication* in the *VLT 2800 Design Guide* for further information.

Warning word [Hex] gives one or several warnings in hex code. See *Serial communication* in the *VLT 2800 Design Guide* for further information.

Extended status word [Hex] gives one or several status modes in Hex code. See *Serial communication* in the *VLT 2800 Design Guide* for further information.

Communication option card warning [Hex] gives a warning word if there is a fault in the communication bus. Only active if communication options are installed.
If there are no communication options 0 Hex is displayed.

Pulse count gives the number of pulses that the unit has registered.

---

010 Small display line 1.1
(DISPLAY LINE 1.1)

Value:

See par. 009 *Large display readout*	★ Analog input 53 [V] [17]

Function:

In this parameter, the first of three data values can be selected that is to be displayed in the LCP control unit display, line 1, position 1. This is a useful function, e.g. when setting the PID regulator, as it gives a view of process reactions to reference changes. The display

Programming

★ = factory setting, () = display text, [] = value for use in communication via serial communication port

readout is activated by pushing the [DISPLAY STATUS] key.

Description of choice:

See parameter 009 *Large display readout*.

---

011 Small display readout 1.2
(DISPLAY LINE 1.2)

Value:

See parameter 009 *Large display readout* ★ Motor current [A][6]

Function:

See the functional description given under parameter 010 *Small display readout*.

Description of choice:

See parameter 009 *Large display readout*.

---

012 Small display readout 1.3
(DISPLAY LINE 1.3)

Value:

See parameter 009 *Large display readout* ★ Feedback [unit] [3]

Function:

See the functional description given under parameter 010 *Small display readout*.

Description of choice:

See parameter 009 *Large display readout*.

---

013 Local control
(LOC CTRL/CONFIG.)

Value:

Local not active (DISABLE) [0]
Local control and open loop without slip compensation
(LOC CTRL/OPEN LOOP) [1]
Remote-operated control and open loop without slip compensation
(LOC+DIG CTRL) [2]
Local control as parameter 100
(LOC CTRL/AS P100) [3]
★ Remote-operated control as parameter 100
(LOC+DIG CTRL/AS P100) [4]

Function:

This is where the required function is selected if, in parameter 002 *Local/remote operation, Local operation* [1] has been chosen.

Description of choice:

If *Local not active* [0] is selected, it is not possible to set a reference via parameter 003 *Local reference*. In order to enable a shift to *Local not active* [0], parameter 002 *Local/remote operation* must be set to *Remote operation* [0].

Local control and open loop [1] is used if the motor speed is to be set via parameter 003 *Local reference*. When this choice is made, parameter 100 *Configuration* automatically shifts to *Speed regulation, open loop* [0].

Remote-operated control and open loop [2] functions in the same way as *Local control and open loop* [1]; however, the frequency converter can also be controlled via the digital inputs.

For selections [1-2] control is shifted to open loop, no slip compensation.

Local control as parameter 100 [3] is used when the motor speed is to be set via parameter 003 *Local reference*, but without parameter 100 *Configuration* automatically shifting to *Speed regulation, open loop* [0].

Remote-operated control as parameter 100 [4] works the same way as *Local control as parameter 100* [3]; however, the frequency converter can also be controlled via the digital inputs.

Shifting from *Remote operation* to *Local operation* in parameter 002 *Local/remote operation*, while this parameter has been set to *Remote-operated control and open loop* [1]: The present motor frequency and direction of rotation will be maintained. If the present direction of rotation does not respond to the reversing signal (negative reference), the reference will be set to 0.

Shifting from *Local operation* to *Remote operation* in parameter 002 *Local/remote control*, while this parameter has been set to *Remote-operated control and open loop* [1]: The configuration selected in parameter 100 *Configuration* will be active. The shift will be smooth.

Shifting from *Remote control* to *Local control* in parameter 002 *Local/remote operation*, while this parameter has been set to *Remote-operated control as parameter 100* [4]: the present reference will be maintained. If the reference signal is negative, the local reference will be set to 0.

★ = factory setting, () = display text, [] = value for use in communication via serial communication port

Shifting from *Local operation* to *Remote operation* in parameter 002 *Local/remote operation*, while this parameter has been set to *Remote operation*: The local reference will be replaced by the remote-operated reference signal.

014 Local stop
(LOCAL STOP)

Value:

Not active (DISABLE) [0]
★ Active (ENABLE) [1]

Function:

In this parameter, the local [STOP]-key can be engaged or disengaged on the control panel and on the LCP control panel.

Description of choice:

If *Not active* [0] is selected in this parameter, the [STOP]-key will be inactive.

NB!
If *Not active* [0] is selected, the motor cannot be stopped by means of the [STOP]-key.

015 Local jog
(LOCAL JOGGING)

Value:

★ Not active (DISABLE) [0]
Active (ENABLE) [1]

Function:

In this parameter, the jog function on the LCP control panel can be engaged/disengaged.

Description of choice:

If *Not active* [0] is selected in this parameter, the [JOG]-key will be inactive.

016 Local reversing
(LOCAL REVERSING)

Value:

★ Not active (DISABLE) [0]
Active (ENABLE) [1]

Function:

In this parameter you can select/deselect the reversing function on the LCP control panel. The key can only be used if parameter 002 *Local/remote operation* is set to *Local operation* [1] and parameter 013 *Localcontrol* to *Local control, open loop* [1] or *Local control as parameter 100* [3].

Description of choice:

If *Disable* [0] is selected in this parameter, the [FWD/REV] key will be disabled. See also parameter 200 *Output frequency range*.

017 Local reset of trip
(LOCAL RESET)

Value:

Not active (DISABLE) [0]
★ Active (ENABLE) [1]

Function:

In this parameter, the reset function on the control panel can be engaged/disengaged.

Description of choice:

If *Not active* [0] is selected in this parameter, the reset function will be inactive.

NB!
Select *Not active* [0], only if an external reset signal has been connected via the digital inputs.

018 Lock for data changes
(DATA CHANGE LOCK)

Value:

★ Not locked (NOT LOCKED)	[0]
Locked (LOCKED)	[1]

Function:

In this parameter, it is possible to 'lock' the controls to disable data changes via the control keys.

Description of choice:

If *Locked* [1] is selected, data changes in the parameters cannot be made; however, it will still be possible to make data changes via serial communication. Parameter 009-012 *Display readout* can be changed via the control panel.

---

019 Operating mode at power-up, local operation
(POWER UP ACTION)

Value:

Auto restart, use saved reference (AUTO RESTART)	[0]
★ Forced stop, use saved reference (LOCAL=STOP)	[1]
Forced stop, set ref. to 0 (LOCAL=STOP, REF=0)	[2]

Function:

Setting of the required operating mode when the mains voltage is engaged. This function can only be active if *Local operation* [1] has been selected in parameter 002 *Local/remote operation*.

Description of choice:

Auto restart, use saved ref. [0] is selected if the frequency converter is to start using the local reference (set in parameter 003 *Local reference*) and the start/stop state given via the control keys immediately prior to the mains voltage being cut out.
Forced stop, use saved ref. [1] is selected if the frequency converter is to remain stopped when the mains voltage is engaged, until the [START]-key is activated. After a start command the motor speed is ramped up to the saved reference in parameter 003 *Local reference*.
Forced stop, set ref. to 0 [2] is selected if the frequency converter is to remain stopped when the mains voltage is cut back in. Parameter 003 *Local reference* is to be zeroed.

NB!
In remote operation (parameter 002 *Local/remote operation*) the start/stop state at the time of mains connection will depend on the external control signals. If *Pulse start* [8] is selected in parameter 302 *Digital input*, the motor will remain stopped after mains connection.

---

020 Hand operation
(HAND OPERATION)

Value:

★ Not active (DISABLE)	[0]
Active (ENABLE)	[1]

Function:

In this parameter you can select whether it should be possible or not to switch between Auto- and Hand mode. In Auto mode the frequency converter is controlled by external signals whereas the frequency converter in Hand mode is controlled via a local reference directly from the control unit.

Description of choice:

If *Not active* [0] is selected in this parameter, the Hand mode function will be inactive. If *Active* [1] is selected you can switch between Auto- and Hand mode. For further information, see the *Control Unit* section.

---

024 Userdefined Quick Menu
(user quickmenu)

Value:

★ Not active (Disable)	[0]
Active (Enable)	[1]

Function:

In this parameter you can select the standard setup of the Quick menu key on the control panel and the LCP 2 control panel.
Using this function, in parameter 025 *Quick Menu setup* the user can select up to 20 parameters for the Quick Menu key.

Description of choice:

If *not active* [0] is selected, the standard setup of the Quick Menu key is active.

★ = factory setting, () = display text, [] = value for use in communication via serial communication port

If *Active* [1] is selected, the user-defined Quick Menu is active.

025 Quick Menu setup
(quick menu setup)

Value:

[Index 1 - 20] Value: 0 - 999 ★ 000

Function:

In this parameter you define which parameters are required in the Quick Menu when parameter 024 *User-defined Quick Menu* is set to *Active* [1].
Up to 20 parameters can be selected for the user-defined Quick Menu.



NB!
Please note that this parameter can only be set using an LCP 2 control panel. See *Order form*.

Description of choice:

The Quick Menu is set up as follows:

1. Select parameter 025 *Quick Menu setup* and press [CHANGE DATA].
2. Index 1 indicates the first parameter in Quick Menu. You can scroll between the index numbers using the [+ / -] keys. Select Index 1.
3. Using [< >] you can scroll between the three figures. Press the [<] key once ad the last number in the parameter number can be selected using the [+ / -] keys. Set Index 1 to 100 for parameter 100 *Configuration*.
4. Press [OK] when Index 1 has been set to 100.
5. Repeat steps 2 - 4 until all parameters required have been set to the Quick Menu key.
6. Press [OK] to complete the Quick Menu set-up.

If parameter 100 *Configuration* is selected at Index 1, Quick Menu will start with this parameter every time Quick Menu is activated.

Please note that parameter 024 *User-defined Quick Menu* and parameter 025 *Quick Menu setup* are reset to the factory setting during initialisation.

■ Load and Motor

100 Configuration
(Configuration)

Value:

★ Speed control, open loop (SPEED OPEN LOOP)	[0]
Speed control, closed loop (SPEED CLOSED LOOP)	[1]
Process control, closed loop (PROCESS CLOSED LOOP)	[3]

Function:

This parameter is used to select the configuration to which the frequency converter is to be adapted. This makes adaptation to a given application simple, since the parameters not used in a given configuration are hidden (not active).

Description of choice:

If *Speed control, open loop* [0] is selected, normal speed control is obtained (without feedback signal) with automatic load and slip compensation to ensure a constant speed at varying loads. Compensations are active, but may be disabled in parameter 134 *Load compensation* and parameter 136 *Slip compensation* as required.

If *Speed control, closed loop* [1] is selected, better speed accuracy is obtained. A feedback signal must be added, and the PID regulator must be set in parameter group 400 *Special functions*.

If *Process control, closed loop* [3] is selected, the internal process regulator is activated to enable precise control of a process in relation to a given process signal. The process signal can be set to the relevant process unit or as a percentage. A feedback signal must be added from the process and the process regulator must be set in parameter group 400 *Special functions*. Process closed loop is not active if a DeviceNet card is mounted and Instance 20/70 or 21/71 is chosen in parameter 904 *Instance types*.

101 Torque characteristic
(TORQUE CHARACT)

Value:

★ Constant torque (Constant torque)	[1]
Variable torque low (torque: low)	[2]
Variable torque medium (torque: med)	[3]
Variable torque high (torque: high)	[4]
Variable torque low with CT start (VT LOW CT START)	[5]
Variable torque medium with CT start (VT MED CT START)	[6]
Variable torque high with CT start (VT HIGH CT START)	[7]
Special motor mode (Special motor mode)	[8]

CT = Constant torque

Function:

This parameter enables a choice of principle for adaptation of the U/f ratio of the frequency converter to the torque characteristic of the load. See par. 135 *U/f ratio.*

Description of choice:

If *Constant torque* [1] is selected, a load-dependent U/f characteristic is obtained, in which output voltage and output frequency are increased at increasing loads in order to maintain constant magnetization of the motor.

Select *Variable torque low* [2], *Variable torque medium* [3] or *Variable torque high* [4], if the load is square (centrifugal pumps, fans).
Variable torque - low with CT start [5], *- medium with CT start* [6] or *high with CT start* [7], are selected if you need a greater breakaway torque than can be achieved with the three first characteristics.

NB!
Load and slip compensation are not active if variable torque or special motor mode have been selected.

★ = factory setting, () = display text, [] = value for use in communication via serial communication port

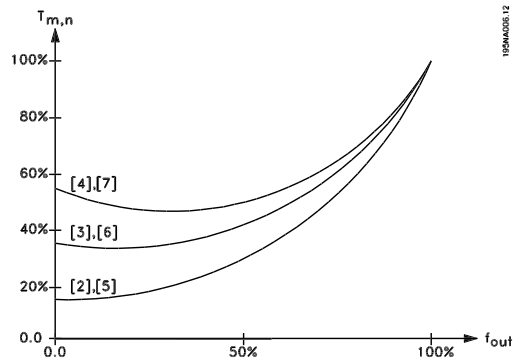

Select *Special motor mode* [8], if a special U/f setting is needed that is to be adapted to the present motor. The break points are set in parameters 423-428 *Voltage/frequency* .

NB!
Please note that if a value set in the nameplate parameters 102-106 is changed, there will be an automatic change of parameter 108 *Stator resistance* and 109 *Stator reactance*.

102 Motor power $P_{M,N}$
(motor power)

Value:

0.25 - 22 kW ★ Depends on unit

Function:

Here you must set a power value [kW] $P_{M,N}$, corresponding to the motor's rated power. The factory sets a rated power value [kW] $P_{M,N}$, that depends on the type of unit.

Description of choice:

Set a value that matches the nameplate data on the motor. Settings between one size below and one size over the factory setting are possible.

103 Motor voltage $U_{M,N}$
(MOTOR VOLTAGE)

Value:

For 200 V units: 50 - 999 V ★ 230 V

For 400 V units: 50 - 999 V ★ 400 V

Function:

This is where to set the rated motor voltage $U_{M,N}$ for either star Y or delta Δ.

Description of choice:

Select a value that corresponds to the nameplate data on the motor, regardless of the frequency converter's mains voltage.

104 Motor frequency $f_{M,N}$
(MOTOR FREQUENCY)

Value:

24-1000 Hz ★ 50 Hz

Function:

This is where to select the rated motor frequency $f_{M,N}$.

Description of choice:

Select a value that corresponds to the nameplate data on the motor.

105 Motor current $I_{M,N}$
(MOTOR CURRENT)

Value:

0,01 - I_{MAX} ★ Depends on choice of motor

Function:

The nominal, rated current of the motor $I_{M,N}$ forms part of the frequency converter calculation of features such as torque and motor thermal protection.

Description of choice:

Set a value that corresponds to the nameplate data on the motor. Set the motor current $I_{M,N}$ taking into account whether the motor is star-connected Y or delta-connected Δ.

106 Rated motor speed
(MOTOR NOM. SPEED)

Value:

100 - $f_{M,N}$ x 60 (max. 60000 rpm) ★ Depends on parameter 104 *Motor frequency, $f_{M,N}$*

Function:

This is where to set the value that corresponds to the rated motor speed $n_{M,N}$ that can be seen from the nameplate data.

Description of choice:

Select a value that corresponds to the nameplate data on the motor.

Programming

★ = factory setting, () = display text, [] = value for use in communication via serial communication port

NB!
The max. value equals $f_{M,N}$ x 60. $f_{M,N}$ to be set in parameter 104 *Motor frequency, $f_{M,N}$* .

107 Automatic motor tuning, AMT (auto motor tun.)

Value:

★ Optimisation off (AMT off)	[0]
Optimisation on (AMT start)	[2]

Function:

NB!
AMT is not possible on VLT 2880-82.

Automatic motor tuning is an algorithm that measures stator resistance R_S without the motor axle turning. This means that the motor is not delivering any torque. AMT can be used with benefit when initialising units where the user wishes to optimise adjustment of the frequency converter to the motor being used. This is used in particular when the factory setting does not sufficiently cover the motor.

For the best possible tuning of the frequency converter it is recommended that AMT is performed on a cold motor. It should be noted that repeated AMT runs can cause heating of the motor, resulting in an increase in the stator resistance R_S. As a rule, however, this is not critical.

AMT is performed as follows:

Start AMT:

1. Give a STOP signal.
2. Parameter 107 *Automatic motor tuning* is set at value [2] *Optimisation on*.
3. A START signal is given and parameter 107 *Automatic motor tuning* is reset to [0] when AMT has been completed.

Complete AMT:
AMT is completed by giving a RESET signal. Parameter 108 *Stator resistance, Rs* is updated with the optimised value.

Interrupting AMT:
AMT can be interrupted during the optimisation procedure by giving a STOP signal.

When using the AMT function the following points should be observed:

- For AMT to be able to define the motor parameters as well as possible, the correct type plate data for the motor connected to the frequency converter must be keyed into parameters 102 to 106.
- Alarms will appear in the display if faults arise during tuning of the motor.
- As a rule the AMT function will be able to measure the R_S values for motors that are 1-2 times larger or smaller than the frequency converter's nominal size.
- If you wish to interrupt automatic motor tuning, press the [STOP/RESET] key.

NB!
AMT may not be performed on motors connected in parallel, nor may setup changes be made while AMT is running.
The procedure for AMT controlled from the SLCP:
See section entitled *Control unit*.

Description of choice:
Select *Optimisation on* [2] if you want the frequency converter to perform automatic motor tuning.

108 Stator resistance R_S (STATOR RESISTAN)

Value:

0.000 - X.XXX Ω ★ Depends on choice of motor

Function:
After setting of parameters 102-106 *Nameplate data,* a number of adjustments of various parameters is carried out automatically, including stator resistance R_S. A manually entered R_S must apply to a cold motor. The shaft performance can be improved by fine-tuning R_S and X_S, see procedure below.

NB!
Parameters 108 *Stator resistance R_S* and 109 *Stator reactance X_S* are normally not to be changed if nameplate data has been set.

Description of choice:
R_S can be set as follows:

1. Use the factory settings of R_S which the frequency converter itself chooses on the basis of the motor nameplate data.
2. The value is stated by the motor supplier.
3. The value is obtained through manual measurements: R_S can be calculated by measuring the resistance $R_{PHASE-PHASE}$ between two phase terminals. Where $R_{PHASE-PHASE}$ is lower than 1-2 Ohms (typical for motors > 5.5 kW, 400 V), a special Ohm-meter should be used (Thomson-bridge or similar). **$R_S = 0.5 \times R_{PHASE-PHASE}$.**
4. R_S is set automatically when AMT has been completed. See parameter 107 *Auto motor adaption.*

109 Stator reactance X_S (STATOR REACTANCE)

Value:

0.00 - X,XX Ω ★ Depends on choice of motor

Function:

After setting of parameters 102-106 *Nameplate data*, a number of adjustments of various parameters are made automatically, including stator reactance X_S. The shaft performance can be improved by fine-tuning R_S and X_S, see procedure below.

Description of choice:

X_S can be set as follows:

1. The value is stated by the motor supplier.
2. The value is obtained through manual measurements X_S is obtained by connecting a motor to mains and measuring the phase-phase voltage U_M and the idle current $_\varphi$.

$$X_s = \frac{U_M}{\sqrt{3} \times I_\varphi} - \frac{X_L}{2}$$

X_L: See parameter 142.

3. Use the factory settings of X_S which the frequency converter itself chooses on the basis of the motor nameplate data.

117 Resonance damping (resonance damping)

Value:

OFF - 100%	[OFF - 100]
★ OFF %	[OFF]

Function:

It is possible to optimise the resonance damping in CT mode. The grade of the influence is adjusted in this parameter.
The value may be set between 0% (OFF) and 100%. 100% corresponds to 50% reduction of U/F ratio. Default value is OFF.

Internal settings (fixed):
The resonance filter is active from 10% of nominal speed and above.
In this case 5Hz and above.
Speed to go from 0 to nominal flux level: 500ms
Speed to go from nominal to 0 flux level: 500ms

Description of functionality:
The filter monitors the active motor current and changes the motor voltage according to the figure below. The filter reacts on levels referring to the nominal motor current.

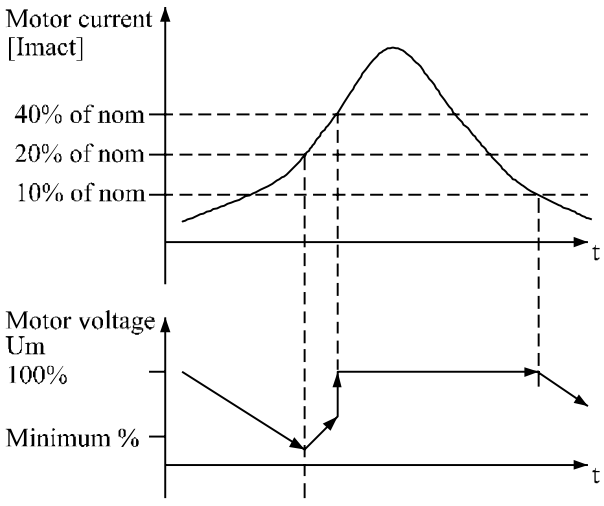

175NA105.10

If the active motor current is below 10%, the motor voltage will be decreased by the speed mentioned above until the voltage reaches the setting for Par. 117. If the active motor current comes over 20% the voltage will be increased by the above mentioned speed. If the active motor current reaches 40% the motor voltage will be increased immediately to normal motor voltage.
The reduction in motor voltage depends on the parameter 117 setting.

Description of choice:

Set the grade of Motor current [Imact] influence on the U/F ratio between 0% (OFF) and 100%. 100% corresponds to 50% reduction of U/F ratio. Default value is OFF.

★ = factory setting, () = display text, [] = value for use in communication via serial communication port

119 High start torque
(High start torq.)

Value:

0.0 - 0.5 sec. ★ 0.0 sec.

Function:

To ensure a high start torque approx. 1.8 x $I_{INV.}$ can be permitted for max. 0.5 sec. The current is, however, limited by the frequency converter's (inverter's) safety limit. 0 sec. corresponds to no high start torque.

Description of choice:

Set the necessary time for which a high start torque is required.

---

120 Start delay
(START DELAY)

Value:

0.0 - 10.0 sec. ★ 0.0 sec.

Function:

This parameter enables a delay of the start-up time after the conditions for start have been fulfilled. When the time has passed, the output frequency will start by ramping up to the reference.

Description of choice:

Set the necessary time before commencing to accelerate.

---

121 Start function
(START FUNCTION)

Value:

DC hold during start delay time (DC HOLD/DELAY TIME) [0]

DC brake during start delay time (DC BRAKE/DELAY TIME) [1]

★ Coasting during start delay time (COAST/DELAY TIME) [2]

Start frequency/voltage clockwise (CLOCKWISE OPERATION) [3]

Start frequency/voltage in reference direction (VERTICAL OPERATION) [4]

Function:

This is where to choose the required mode during the start delay time (parameter 120 *Start delay time*).

Description of choice:

Select *DC hold during start delay time* [0] to energize the motor with a DC hold voltage during the start delay time. Set voltage in parameter 137 *DC hold voltage*.

Choose *DC brake during start delay time* [1] to energize the motor with a DC brake voltage during the start delay time. Set voltage in parameter 132 *DC brake voltage*.

Choose *Coasting during start delay time* [2] and the motor will not be controlled by the frequency converter during the start delay time (inverter turned off).

Choose *Start frequency/voltage clockwise* [3] to obtain the function described in parameter 130 *Start frequency* and 131 *Voltage at start* during start delay time. Regardless of the value assumed by the reference signal, the output frequency equals the setting in parameter 130 *Start frequency* and the output voltage will correspond to the setting in parameter 131 *Voltage at start* .
This functionality is typically used in hoist applications. It is used in particular in applications in which a cone anchor motor is applied, where the direction of rotation is to start clockwise followed by the reference direction.

Select *Start frequency/voltage in reference direction* [4] to obtain the function described in parameter 130 *Start frequency* and 131 *Voltage at start* during the start delay time.
The direction of rotation of the motor will always follow in the reference direction. If the reference signal equals zero, the output frequency will equal 0 Hz, while the output voltage will correspond to the setting in parameter 131 *Voltage at start*. If the reference signal is different from zero, the output frequency will equal parameter 130 *Start frequency* and the output voltage will equal parameter 131 *Voltage at start*. This functionality is used typically for hoist applications with counterweight. It is used in particular for applications in which a cone anchor motor is applied. The cone anchor motor can break away using parameter 130 *Start frequency* and parameter 131 *Voltage at start*.

★ = factory setting, () = display text, [] = value for use in communication via serial communication port

122 Function at stop
(FUNCTION AT STOP)

Value:

★ Coasting (COAST)	[0]
DC hold (DC HOLD)	[1]

Function:

This is where to choose the function of the frequency converter after the output frequency has become lower than the value in parameter 123 *The min. frequency for activation of function at stop* or after a stop command and when the output frequency has been ramped down to 0 Hz.

Description of choice:

Select *Coasting* [0] if the frequency converter is to 'let go' of the motor (inverter turned off).

Select DC hold [1] if parameter 137 *DC hold voltage* is to be activated.

---

123 Min. frequency for activation of function at stop
(MIN.F.FUNC.STOP)

Value:

0,1 - 10 Hz ★ 0,1 Hz

Function:

In this parameter, the output frequency is set at which the function selected in parameter 122 *Function at stop* is to be activated.

Description of choice:

Set the required output frequency.

NB!
If parameter 123 is set higher than parameter 130, then the start delay function (parameter 120 and 121) will be skipped.

NB!
If parameter 123 is set too high, and DC hold has been chosen in parameter 122, the output frequency will jump to the value in parameter 123 without ramping up. This may cause an overcurrent warning / alarm.

---

126 DC brake time
(DC BRAKING TIME)

Value:

0 - 60 sec. ★ 10 sec

Function:

In this parameter, the DC brake time is set at which parameter 132 *DC brake voltage* is to be active.

Description of choice:

Set the required time.

---

127 DC brake cut-in frequency
(DC BRAKE CUT-IN)

Value:

0.0 (OFF) - par. 202
Output frequency high limit, f_{MAX} ★ OFF

Function:

In this parameter, the DC brake cut-in frequency is set at which the DC brake is to be activated in connection with a stop command.

Description of choice:

Set the required frequency.

---

128 Thermal motor protection
(MOT.THERM PROTEC)

Value:

★ No protection (NO PROTECTION)	[0]
Thermistor warning (THERMISTOR WARN)	[1]
Thermistor trip (THERMISTOR TRIP)	[2]
ETR warning 1 (ETR WARNING 1)	[3]
ETR trip 1 (ETR TRIP 1)	[4]
ETR warning 2 (ETR WARNING 2)	[5]
ETR trip 2 (ETR TRIP 2)	[6]
ETR warning 3 (ETR WARNING 3)	[7]
ETR trip 3 (ETR TRIP 3)	[8]
ETR warning 4 (ETR WARNING 4)	[9]
ETR trip 4 (ETR TRIP 4)	[10]

Function:

The frequency converter can monitor the motor temperature in two different ways:

Programming

★ = factory setting, () = display text, [] = value for use in communication via serial communication port

- Via a PTC thermistor that is mounted on the motor. The thermistor is connected between terminal 50 (+10V) and one of the digital input terminals 18, 19, 27 or 29. See parameter 300 *Digital inputs.*
- Thermal load calculation (ETR - Electronic Thermal Relay), based on present load and time. This is compared with the rated motor current $I_{M,N}$ and rated motor frequency $f_{M,N}$. The calculations take into account the need for lower loading at low speeds due to the motor's internal ventilation being reduced.

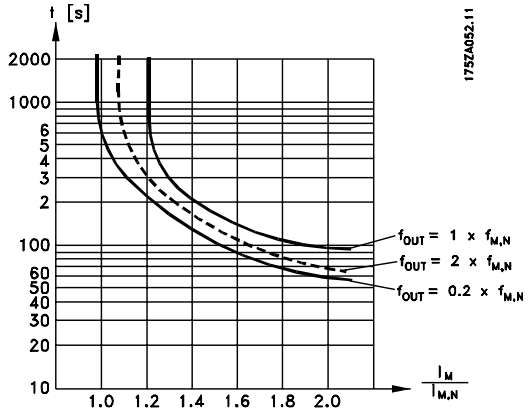

ETR functions 1-4 do not begin to calculate the load until you switch to the Setup in which they have been selected. This means that you can use the ETR function even when changing between two or more motors.

Description of choice:

Select *No protection* [0] if you do not want a warning or trip when a motor is overloaded.
Select *Thermistor warning* [1] if you want a warning when the connected thermistor becomes too hot.
Select *Thermistor trip* [2] if you want a trip when the connected thermistor becomes too hot.
Select *ETR warning 1-4* if you want a warning when the motor is overloaded according to the calculations. You can also programme the frequency converter to give a warning signal via one of the digital outputs. Select *ETR Trip 1-4* if you want a trip when the motor is overloaded according to the calculations.

NB!
This function cannot protect the individual motors in the case of motors linked in parallel.

130 Start frequency (Start frequency)

Value:

0.0 - 10.0 Hz ★ 0.0 Hz

Function:

The start frequency is active for the time set in parameter 120 *Start delay*, after a start command. The output frequency will 'jump' to the next preset frequency. Certain motors, such as conical anchor motors, need an extra voltage/start frequency (boost) at start to disengage the mechanical brake. To achieve this parameters 130 *Start frequency* and 131 *Initial voltage* are used.

Description of choice:

Set the required start frequency. It is a precondition that parameter 121 *Start function*, is set to *Start frequency/voltage clockwise* [3] or *Start frequency voltage in reference direction* [4] and that in parameter 120 *Start delay* a time is set and a reference signal is present.

NB!
If parameter 123 is set higher than parameter 130, the start delay function (parameter 120 and 121) will be skipped.

131 Initial voltage (INITIAL VOLTAGE)

Value:

0.0 - 200.0 V ★ 0.0 V

Function:

Initial voltage is active for the time set in parameter 120 *Start delay* , after a start command. This parameter can be used for example for lifting/dropping applications (conical anchor motors).

Description of choice:

Set the required voltage necessary to cut out the mechanical brake. It is assumed that parameter 121 *Start function*, is set to *Start frequency/voltage clockwise* [3] or *Start frequency/voltage in reference direction* [4] and that in parameter 120 *Start delay* a time is set, and that a reference signal is present.

★ = factory setting, () = display text, [] = value for use in communication via serial communication port

132 DC brake voltage (DC BRAKE VOLTAGE)

Value:

0 - 100% of max. DC brake voltage ★ 0%

Function:

In this parameter, the DC brake voltage is set which is to be activated at stop when the DC brake frequency set in parameter 127 *DC brake cut-in frequency* is reached, or if *DC braking inverse* is active via a digital input or via serial communication. Subsequently, the DC brake voltage will be active for the time set in parameter 126 *DC brake time*.

Description of choice:

To be set as a percentage value of the max. DC brake voltage, which depends on the motor.

133 Start voltage (START VOLTAGE)

Value:

0.00 - 100.00 V ★ Depends on unit

Function:

A higher start torque can be obtained by increasing the start voltage. Small motors (< 1.0 kW) normally require a high start voltage.

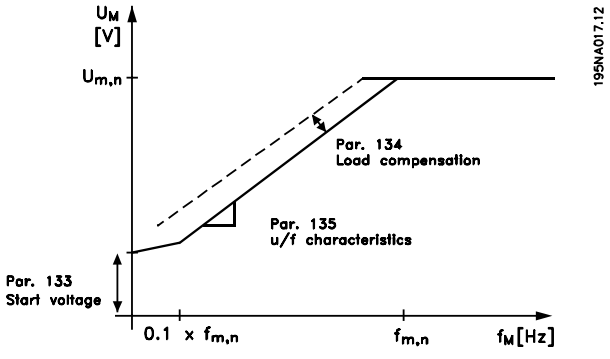

Description of choice:

The factory setting will be suitable for must applications, the value may need to be increase gradually for high torque application.

Warning: If the use of start voltage is exaggerated, this may lead to over-energizing and overheating of the motor and the frequency converter may cut out.

134 Load compensation (LOAD COMPENSATIO)

Value:

0.0 - 300.0% ★ 100.0%

Function:

In this parameter, the load characteristic is set. By increasing the load compensation, the motor is given an extra voltage and frequency supplement at increasing loads. This is used e.g. in motors/applications in which there is a big difference between the full-load current and idle-load current of the motor.

NB!
If this value is set too high, the frequency converter may cut out because of overcurrent.

Description of choice:

If the factory setting is not adequate, load compensation must be set to enable the motor to start at the given load.

Warning: Should be set to 0% in connection with synchronous and parallel-coupled motors and in the case of quick load changes. Too high load compensation may lead to instability.

135 U/f-ratio (U/f RATIO)

Value:

0.00 - 20.00 at Hz ★ Depends on unit

Function:

This parameter enables a shift in the ratio between output voltage (U) and output frequency (f) linearly, so as to ensure correct energizing of the motor and thus optimum dynamics, accuracy and efficiency. The U/f-ratio only affects the voltage characteristic if a selection has been made of *Constant torque* [1] parameter 101 *Torque characteristic.*

Description of choice:

The U/f-ratio is only to be changed if it is not possible to set the correct motor data in parameter 102-109. The value programmed in the factory settings is based on idle operation.

★ = factory setting, () = display text, [] = value for use in communication via serial communication port

136 Slip compensation
(SLIP COMP.)

Value:

-500 - +500% of rated slip compensation ★ 100%

Function:

Slip compensation is calculated automatically, on the basis of such data as the rated motor speed $n_{M,N}$. In this parameter, the slip compensation can be fine-tuned, thereby compensating for tolerances on the value for $n_{M,N}$. Slip compensation is only active if a selection has been made of *Speedregulation, open loop* [0] in parameter 100 *Configuration* and *Constant torque* [1] in parameter 101 *Torque characteristic*.

Description of choice:

Key in a % value.

---

137 DC hold voltage
(DC HOLD VOLTAGE)

Value:

0 - 100% of max. DC hold voltage ★ 0%

Function:

This parameter is used to keep the motor (holding torque) at start/stop.

Description of choice:

This parameter can only be used if a selection has been made of *DC hold* in parameter 121 *Start function* or 122 *Function at stop* . To be set as a percentage value of the max. DC hold voltage, which depends on the choice of motor.

---

138 Brake cut out value
(Brake cut out)

Value:

0.5 - 132.0/1000.0 Hz ★ 3.0 Hz

Function:

Here you can select the frequency at which the external brake is released, via the output defined in parameter 323 *Relay output 1-3* or 341 *Digital output, terminal 46*.

Description of choice:

Set the required frequency.

---

139 Brake cut in frequency
(Brake cut in)

Value:

0.5 - 132.0/1000.0 Hz ★ 3.0 Hz

Function:

Here you can select the frequency at which the external brake is activated; this takes place via the output defined in parameter 323 *Relay output 1-3* or 341 *Digital output terminal 46*.

Description of choice:

Set the required frequency.

---

140 Current, minimum value
(CURRENT MIN VAL)

Value:

0 % - 100 % of inverter output current ★ 0 %

Function:

This is where the user selects the minimum motor current running for the mechanical brake to be released. Current monitoring is only active from stop until the point when the brake is released.

Description of choice:

This is an extra safety precaution, aimed at guaranteeing that the load is not lost during start of a lifting/lowering operation.

---

142 Leakage reactance X_L
(LEAK. REACTANCE)

Value:

0.000 - XXX,XXX Ω ★ Depends on choice of motor

X_L is sum of rotor and stator leakage reactance.

Function:

After setting of parameters 102-106 *Nameplate data*, a number of adjustments of various parameter is made automatically, including the leakage reactance X_L. The shaft performance can be improved by fine-tuning the leakage reactance X_L.

NB!
Parameter 142 *The leakage reactance X_L* is normally not to be changed if the nameplate data have been set, parameters 102-106.

★ = factory setting, () = display text, [] = value for use in communication via serial communication port

Description of choice:

X_L can be set as follows:

1. The value is stated by the motor supplier.
2. Use the factory settings of X_L which the frequency converter itself chooses on the basis of the motor nameplate data.

---

143 Internal fan control
(fan control)

Value:

★ Automatic (automatic)	[0]
Always switched on (always on)	[1]
Always switched off (always off)	[2]

Function:

This parameter can be set so that the internal fan is automatically switched on and off. You can also set the internal fan to be permanently switched on or off.

Description of choice:

If *Automatic* [0] is selected, the internal fan is switched on or off depending on the ambient temperature and the loading of the frequency converter.
If *Always switched on* [1] *Always switched off* [2] are selected, the internal fan will be permanently switched on or off.



NB!
If *Always switched off* [2] is selected in combination with high switch frequency, long motor cables or high output power, the frequency converter's life span is reduced.

---

144 Gain AC brake
(Gain AC brake)

Value:

1.00 - 1.50 ★ 1.30

Function:

This parameter is used to set the AC brake. Using par. 144 it is possible to adjust the size of the generator torque that can be applied to the motor without the intermediate circuit voltage exceeding the warning level.

Description of choice:

The value is increased if a greater possible brake torque is required. If 1.0 is selected, this corresponds to the AC brake being inactive.



NB!
If the value in par. 144 is increased, the motor current will simultaneously increase significantly when generator loads are applied. The parameter should therefore only be changed if it is guaranteed during measurement that the motor current in all operating situations will never exceed the maximum permitted current in the motor. *Please note*: that the current cannot be read out from the display.

---

146 Reset voltage vector
(RESET VECTOR)

Value:

*Off (OFF)	[0]
Reset (RESET)	[1]

Function:

When the voltage vector is reset it is set to the same starting point each time a new process commences.

Description of choice:

Select reset (1) when running unique processes each time they arise. This will enable repetitive precision when stopping to be improved. Select Off (0) for example for lifting/lowering operations or synchronous motors. It is an advantage that the motor and the frequency converter are always synchronized.

■ References & Limits

200 Output frequency range (OUT FREQ. RNG/ROT)

Value:

★ Only clockwise, 0 - 132 Hz (132 Hz CLOCKWISE) [0]

Both directions, 0 - 132 Hz (132 Hz BOTH DIRECT) [1]

Anti-clockwise only, 0 - 132 Hz (132 Hz COUNTER CLOCK) [2]

Clockwise only, 0 - 1000 Hz (1000 Hz CLOCK WISE) [3]

Both directions, 0 - 1000 Hz (1000 Hz BOTH DIRECT) [4]

Anti-clockwise only, 0 - 1000 Hz (1000 Hz COUNTER CLOCK) [5]

Function:

This parameter guarantees protection against unwanted reversing. Furthermore, the maximum output frequency can be selected that is to apply regardless of the settings of other parameters. This parameter has no function if *Process regulation, closed loop* has been selected in parameter 100 *Configuration*.

Description of choice:

Select the required direction of rotation as well as the maximum output frequency. Please note that if *Clockwise only* [0]/[3] or *Anti-clockwise only* [2]/[5] is selected, the output frequency will be limited to the range f_{MIN}-f_{MAX}. If *Both directions* [1]/[4] is selected, the output frequency will be limited to the range ± f_{MAX} (the minimum frequency is of no significance).

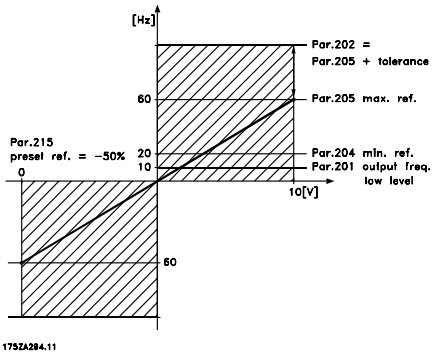

201 Output frequency low limit, f_{MIN} (MIN OUTPUT FREQ)

Value:

0.0 - f_{MAX} ★ 0.0 Hz

Function:

In this parameter, a minimum motor frequency limit can be selected that corresponds to the minimum speed at which the motor is allowed to run. If *Both directions* has been selected in parameter 200 *Output frequency range*, the minimum frequency is of no significance.

Description of choice:

The value chosen can range from 0.0 Hz to the frequency set in parameter 202 *Output frequency high limit, f_{MAX}* .

202 Output frequency high limit, f_{MAX} (max. output freq)

Value:

f_{MIN} - 132/1000 Hz (par. 200 *Output frequency range*) ★ 132 Hz

Function:

In this parameter, a maximum output frequency limit can be selected that corresponds to the highest speed at which the motor is allowed to run.

NB!
The output frequency of the frequency converter can never assume a value higher than 1/10 of the switching frequency (parameter 411 *Switching frequency*).

Description of choice:

A value can be selected from f_{MIN} to the value chosen in parameter 200 *Output frequency range*.

★ = factory setting, () = display text, [] = value for use in communication via serial communication port

203 Reference range
(REFERENCE RANGE)

Value:

★ Min. reference - Max reference (min - max) [0]
-Max. reference - Max. reference (-max - +max) [1]

Function:

In this parameter you select whether the reference signal must be positive or whether it can be both positive and negative. The minimum limit may be a negative value, unless in parameter 100 *Configuration* a selection has been made of *Speed regulation, closed loop*. You should select *Min ref. - Max. ref.* [0], if *Process regulation, closed loop* [3] has been selected in parameter 100 *Configuration*.

Description of choice:

Select the required range.

204 Minimum reference, Ref_{MIN}
(Min.reference)

Value:

Par. 100 *Config.* = *Open loop* [0].-100,000.000 - par. 205 Ref_{MAX} ★ 0.000 Hz
Par. 100 *Config.* = *Closed loop* [1]/[3].-Par. 414 *Minimum feedback* - par. 205 Ref_{MAX} ★ 0.000 rpm/par 416

Function:

Minimum reference is an expression of the minimum possible value of the total of all references. If in parameter 100 *Configuration*, *Speed regulation, closed loop* [1] or *Process regulation, closed loop* [3] is selected, the minimum reference is limited by parameter 414 *Minimum feedback*. Minimum reference is ignored if the local reference is active.

The reference unit can be defined from the following table:

Par. 100 *Configuration*	Unit
Open loop [0]	Hz
Speed reg, closed loop [1]	rpm
Process reg, closed loop [3]	Par. 416

Description of choice:

The minimum reference is preset if the motor has to run at a minimum speed, regardless of whether the resulting reference is 0.

205 Maximum reference, Ref_{MAX}
(max.reference)

Value:

Par. 100 *Config.* = *Open loop* [0].Par. 204 Ref_{MIN} - 1000.000 Hz ★ 50.000 Hz
Par. 100 *Config.* = *Closed loop* [1]/[3]. Par. 204 Ref_{MIN} - Par. 415 *Max. feedback* ★ 50.000 rpm/par 416

Function:

The maximum reference gives the highest value that can be assumed by the sum of all references. If *Closed loop* [1]/[3] is selected in parameter 100 *Configuration* the maximum reference cannot exceed the value in parameter 415 *Maximum feedback*.
Maximum reference is ignored if the local reference is active.

The reference unit can be defined from the following table:

Par. 100 *Configuration*	Unit
Open loop [0]	Hz
Speed reg, closed loop [1]	rpm
Process reg, closed loop [3]	Par. 416

Description of choice:

Maximum reference is set, if the speed of the motor is to be max. the set value, regardless of the whether the resulting reference is greater than the maximum reference.

206 Ramp type
(Ramp type)

Value:

★ Linear (Linear) [0]
Sin shaped (SIN SHAPED) [1]
Sin^2 shaped (S-SHAPED 2) [2]

Function:

You can choose between a linear, an S-shaped and an S^2 ramp process.

Description of choice:

Select the required ramp type depending on the required acceleration/deceleration process.

★ = factory setting, () = display text, [] = value for use in communication via serial communication port

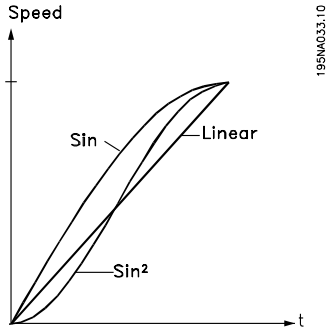

207 Ramp-up time 1
(ramp-up time 1)

Value:

0.02 - 3600.00 sec ★ 3.00 sec (VLT 2803-2875)
10.00 sec (VLT 2880-2882)

Function:

The ramp-up time is the acceleration time from 0 Hz to the rated motor frequency $f_{M,N}$ (parameter 104 *Motor frequency, $f_{M,N}$*). It is assumed that the output current will not reach the current limit (set in parameter 221 *Current limit I_{LIM}*).

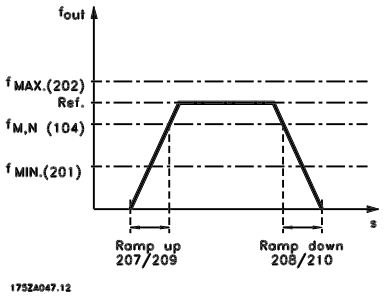

Description of choice:

Set the required ramp-up time.

208 Ramp-down time 1
(ramp down time 1)

Value:

0.02 - 3600.00 sec ★ 3.00 sec (VLT 2803-2875)
10.00 sec (VLT 2880-2882)

Function:

The ramp-down time is the deceleration time from the rated motor frequency $f_{M,N}$ (parameter 104 *Motor frequency, $f_{M,N}$*) to 0 Hz, provided no overvoltage arises in the inverter because of generating operation of the motor.

Description of choice:

Set the required ramp-down time.

209 Ramp-up time 2
(ramp up time 2)

Value:

0.02 - 3600.00 sec. ★ 3.00 sec (VLT 2803-2875)
10.00 sec (VLT 2880-2882)

Function:

See description of parameter 207 *Ramp-up time 1*.

Description of choice:

Set the required ramp-up time. Shift from ramp 1 to ramp 2 by activating *Ramp 2* via a digital input.

210 Ramp-down time 2
(RAMP DOWN TIME 2)

Value:

0.02 - 3600.00 sec. ★ 3.00 sec (VLT 2803-2875)
10.00 sec (VLT 2880-2882)

Function:

See description of parameter 208 *Ramp-down time 1*.

Description of choice:

Set the required ramp-down time. Shift from ramp 1 to ramp 2 by activating *Ramp 2* via a digital input.

211 Jog ramp time
(jog ramp time)

Value:

0.02 - 3600.00 sec. ★ 3.00 sec (VLT 2803-2875)
10.00 sec (VLT 2880-2882)

Function:

The jog ramp time is the acceleration/deceleration time from 0 Hz to the rated motor frequency $f_{M,N}$ (parameter 104 *Motor frequency, $f_{M,N}$*). It is assumed that the output current will not reach the current limit (set in parameter 221 *Current limit I_{LIM}*).

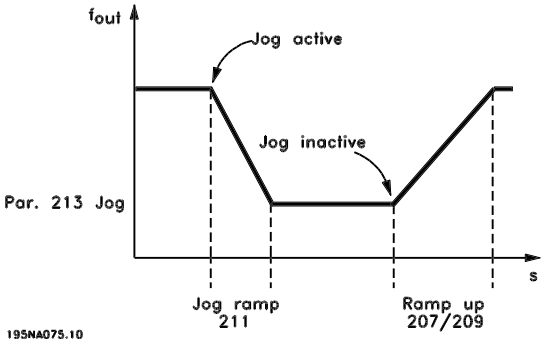

★ = factory setting, () = display text, [] = value for use in communication via serial communication port

The jog ramp time starts if a jog-signal is given via the LCP control panel, one of the digital inputs or the serial communication port.

Description of choice:
Set the required ramp time.

---

212 Quick-stop ramp-down time (Q STOP RAMP TIME)

Value:

0.02 - 3600.00 sec. ★ 3.00 sec (VLT 2803-2875)
10.00 sec (VLT 2880-2882)

Function:
The quick-stop ramp-down time is the deceleration time from the rated motor frequency to 0 Hz, provided no overvoltage arises in the inverter because of generating operation of the motor, or if the generated current exceeds the current limit in parameter 221 *Current limit I_{LIM}* . Quick-stop is activated via one of the digital inputs or the serial communication.

Description of choice:
Set the required ramp-down time.

---

213 Jog frequency (Jog frequency)

Value:

0.0 - Par. 202 Output frequency high limit, f_{MAX} ★ 10.0 Hz

Function:
Jog frequency f_{JOG} means a fixed output frequency that the frequency converter supplies to the motor when the Jog function is activated. Jog can be activated via the digital inputs, serial communication or via the LCP control panel, on the condition that this is active in parameter 015 *Local jog*.

Description of choice:
Set the required frequency.

---

214 Reference function (Ref function)

Value:

★ Sum (sum) [0]
Relative (relative) [1]
External/preset (external/preset) [2]

Function:
It is possible to define how preset references are to be added to the other references; for this purpose, use *Sum* or *Relative*. It is also possible by using the *External/preset* to select whether a shift between external references and preset references is required.
External reference is the sum of the analogue references, pulse references and any references from serial communication.

Description of choice:
If *Sum* [0] is selected, one of the adjusted preset references (parameters 215-218 *Preset reference*) is summarized as a percentage of the reference range (Ref_{MIN} - Ref_{MAX}), added to the other external references.
If *Relative* [1] is selected, one of the added preset references (parameters 215-218 *Preset reference*) is summarized as a percentage of the sum of present external references.
If *External/preset* [2] is selected, it is possible via a digital input to shift between external references or preset references. Preset references will be a percentage value of the reference range.



NB!
If Sum or Relative is selected, one of the preset references will always be active. If the preset references are to be without influence, they must be set to 0% (factory setting).

---

215 Preset reference 1 (PRESET REF. 1)
216 Preset reference 2 (PRESET REF. 2)
217 Preset reference 3 (PRESET REF. 3)
218 Preset reference 4 (PRESET REF. 4)

Value:

-100.00% - +100.00% ★ 0.00%
of the reference range/external reference

Function:
Four different preset references can be programmed in parameters 215-218 *Preset reference*.
The preset reference is stated as a percentage of the reference range (Ref_{MIN} - Ref_{MAX}) or as a percentage of the other external references, depending on the choice made in parameter 214 *Reference function*.
The choice between preset references can be made via the digital inputs or via serial communication.

★ = factory setting, () = display text, [] = value for use in communication via serial communication port

Preset ref., msb	Preset ref. lsb	
0	0	Preset ref. 1
0	1	Preset ref. 2
1	0	Preset ref. 3
1	1	Preset ref. 4

Description of choice:

Set the preset reference(s) that is/are to be the options.

219 Catch up/Slow down reference (Catch up/Slw dwn)

Value:

0.00 - 100% of the given reference ★ 0.00%

Function:

In this parameter, the percentage value can be set which will either be added to or deducted from the remote-controlled references.

The remote-controlled reference is the sum of preset references, analogue references, pulse reference and any references from serial communication.

Description of choice:

If *Catch up* is active via a digital input, the percentage value in parameter 219 *Catch up/Slow down reference* will be added to the remote-controlled reference.

If *Slow down* is active via a digital input, the percentage value in parameter 219 *Catch up/Slow down reference* will be deducted from the remote-controlled reference.

221 Current limit, I_{LIM} (current limit)

Value:

0 - XXX.X % of par. 105 ★ 160 %

Function:

In this parameter, the maximum output current I_{LIM} is set. The factory-set value corresponds to the maximum output current I_{MAX} . If the current limit is to be used as motor protection, set the rated motor current. If the current limit is set above 100% (the rated output current of the frequency converter, $I_{INV.}$), the frequency converter can only handle a load intermittently, i.e. for short periods at a time. After the load has been higher than $I_{INV.}$, it must be ensured that for a period the load is lower than $I_{INV.}$ Please note that if the current limit is set at a lower value than $I_{INV.}$, the acceleration torque will be reduced to the same extent.

Description of choice:

Set the required maximum output current I_{LIM}.

223 Warning: Low current, I_{LOW} (warn. current lo)

Value:

0.0 - par. 224 *Warning: High current, I_{HIGH}* ★ 0.0 A

Function:

If the output current falls below the preset limit I_{LOW} a warning is given.

Parameters 223-228 *Warning functions* are out of function during ramp-up after a start command and after a stop command or during stop.The warning functions are activated when the output frequency has reached the resulting reference. The signal outputs can be programmed to give a warning signal via terminal 46 and via the relay output.

Description of choice:

The lower signal limit of the output current I_{LOW} must be programmed within the normal working range of the frequency converter.

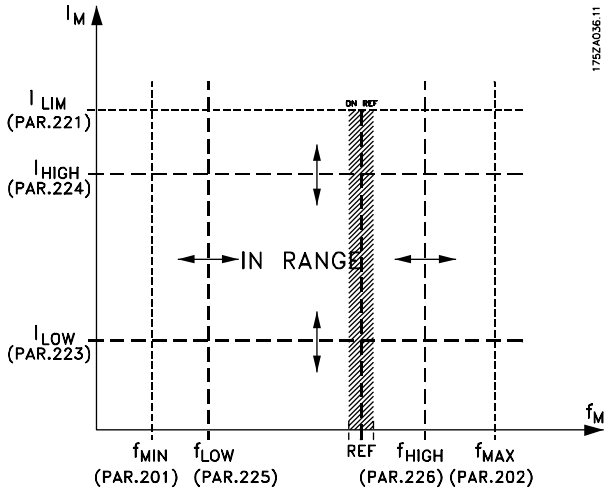

224 Warning: High current, I_{HIGH} (warn. current hi)

Value:

0 - I_{MAX} ★ I_{MAX}

Function:

If the output current exceeds the preset limit I_{HIGH} a warning is given.

Parameters 223-228 *Warning functions* do not work during ramp-up after a start command and after stop

★ = factory setting, () = display text, [] = value for use in communication via serial communication port

command or during stop. The warning functions are activated when the output frequency has reached the resulting reference. The signal outputs can be programmed to give a warning signal via terminal 46 and via the relay output.

Description of choice:

The output current's upper signal limit I_{HIGH} must be programmed within the frequency converter's normal operating range. See drawing at parameter 223 *Warning: Low current, I_{LOW}* .

---

225 Warning: Low frequency, f_{LOW} (warn.freq. low)

Value:

0.0 - par. 226
Warn.: High frequency, f_{HIGH} ★ 0.0 Hz

Function:

If the output frequency falls below the preset limit f_{LOW}, a warning is given.
Parameters 223-228 *Warning functions* are out of function during ramp-up after a start command and after stop command or during stop. The warning functions are activated when the output frequency has reached the resulting reference. The signal outputs can be programmed to give a warning signal via terminal 46 and via the relay output.

Description of choice:

The lower signal limit of the output frequency f_{LOW} must be programmed within the normal operating range of the frequency converter. See drawing at parameter 223 *Warning: Low current, I_{LOW}.*

---

226 Warning: High frequency f_{HIGH} (warn.freq.high)

Value:

Par. 200 *Frequency range* = 0-132 Hz
[0]/[1].par. 225 f_{LOW} - 132 Hz ★ 132.0 Hz
Par. 200 *Frequency range* = 0-1000 Hz [2]/[3].par. 225 f_{LOW} - 1000 Hz ★ 132.0 Hz

Function:

If the output frequency exceeds the preset limit f_{HIGH} a warning is given.
Parameters 223-228 *Warning functions* do not work during ramp-up after a start command and after stop command or during stop. The warning functions are activated when the output frequency has reached the resulting reference. The signal outputs can be programmed to give a warning signal via terminal 46 and via the relay output.

Description of choice:

The output frequency's upper signal limit f_{HIGH} must be programmed within the frequency converter's normal operating range. See drawing at parameter 223 *Warning: Low current, I_{LOW}* .

---

227 Warning: Low feedback, FB_{LOW} (warn.feedb. low)

Value:

-100,000.000 - par. 228
Warn.:FB_{HIGH} ★ -4000.000

Function:

If the feedback signal falls below the preset limit FB_{LOW}, a warning is given.
Parameters 223-228 *Warning functions* are out of function during ramp-up after a start command and after a stop command or during stop. The warning functions are activated when the output frequency has reached the resulting reference.The signal outputs can be programmed to give a warning signal via terminal 46 and via the relay output.The unit for feedback in Closed loop is programmed in parameter 416 *Process units*.

Description of choice:

Set the required value within the feedback range (parameter 414 *Minimum feedback, FB_{MIN}* and 415 *Maximum feedback, FB_{MAX}*).

---

228 Warning: High feedback, FB_{HIGH} (warn.feedb high)

Value:

Par. 227 *Warn.: FB_{LOW}* - 100,000.000 ★ 4000.000

Function:

If the feedback signal gets above the preset limit FB_{HIGH}, a warning is given.
Parameters 223-228 *Warning functions* are out of function during ramp-up after a start command and after a stop command or during stop. The warning functions are activated when the output frequency has reached the resulting reference. The signal outputs can be programmed to give a warning signal via ter-

★ = factory setting, () = display text, [] = value for use in communication via serial communication port

minal 46 and via the relay output. The unit for feedback in Closed loop is programmed in parameter 416 *Process units*.

Description of choice:

Set the required value within the feedback range (parameter 414 *Minimum feedback, FB_{MIN}* and 415 *Maximum feedback, FB_{MAX}*).

---

229 Frequence bypass, bandwidth (FREQ BYPASS B.W.)

Value:

0 (OFF) - 100 Hz ★ 0 Hz

Function:

Some systems call for some output frequencies to be avoided because of mechanical resonance problems in the system. In parameters 230-231 *Frequency bypass* these output frequencies can be programmed. In this parameter a bandwidth can be defined on either side of these frequencies.

Description of choice:

The frequency set in this parameter will be centered around parameters 230 *Frequency bypass 1* and 231 *Frequency bypass 2*.

---

230 Frequency bypass 1 (FREQ. BYPASS 1)

231 Frequency bypass 2 (FREQ. BYPASS 2)

Value:

0 - 1000 Hz ★ 0.0 Hz

Function:

Some SYSTEMs call for some output frequencies to be avoided because of mechanical resonance problems in the SYSTEM.

Description of choice:

Enter the frequencies to be avoided. See also parameter 229 *Frequency bypass, bandwidth*.

Inputs and outputs

Digital inputs	Term. no.	18[1]	19[1]	27	29	33
	par. no.	302	303	304	305	307
Value:						
No function	(NO OPERATION)	[0]	[0]	[0]	[0]	★ [0]
Reset	(RESET)	[1]	[1]	[1]	[1]	[1]
Coasting stop inverse	(MOTOR COAST INVERSE)	[2]	[2]	[2]	[2]	[2]
Reset and coasting inverse	(RESET AND COAST INV.)	[3]	[3]	★ [3]	[3]	[3]
Quick-stop inverse	(QUICK-STOP INVERSE)	[4]	[4]	[4]	[4]	[4]
DC braking inverse	(DC-BRAKE INVERSE)	[5]	[5]	[5]	[5]	[5]
Stop inverse	(STOP INVERSE)	[6]	[6]	[6]	[6]	[6]
Start	(START)	★ [7]	[7]	[7]	[7]	[7]
Pulse start	(LATCHED START)	[8]	[8]	[8]	[8]	[8]
Reversing	(REVERSING)	[9]	★ [9]	[9]	[9]	[9]
Reversing and start	(START REVERSING)	[10]	[10]	[10]	[10]	[10]
Start clockwise	(ENABLE FORWARD)	[11]	[11]	[11]	[11]	[11]
Start anti-clockwise	(ENABLE REVERSE)	[12]	[12]	[12]	[12]	[12]
Jog	(JOGGING)	[13]	[13]	[13]	★ [13]	[13]
Freeze reference	(FREEZE REFERENCE)	[14]	[14]	[14]	[14]	[14]
Freeze output frequency	(FREEZE OUTPUT)	[15]	[15]	[15]	[15]	[15]
Speed up	(SPEED UP)	[16]	[16]	[16]	[16]	[16]
Speed down	(SPEED DOWN)	[17]	[17]	[17]	[17]	[17]
Catch-up	(CATCH-UP)	[19]	[19]	[19]	[19]	[19]
Slow-down	(SLOW-DOWN)	[20]	[20]	[20]	[20]	[20]
Ramp 2	(RAMP 2)	[21]	[21]	[21]	[21]	[21]
Preset ref, LSB	(PRESET REF, LSB)	[22]	[22]	[22]	[22]	[22]
Preset ref, MSB	(PRESET REF, MSB)	[23]	[23]	[23]	[23]	[23]
Preset reference on	(PRESET REFERENCE ON)	[24]	[24]	[24]	[24]	[24]
Thermistor	(THERMISTOR)	[25]	[25]	[25]	[25]	
Precise stop, inverse	(PRECISE STOP INV.)	[26]	[26]			
Precise start/stop	(PRECISE START/STOP)	[27]	[27]			
Pulse reference	(PULSE REFERENCE)					[28]
Pulse feedback	(PULSE FEEDBACK)					[29]
Pulse input	(PULSE INPUT)					[30]
Selection of Setup, lsb	(SETUP SELECT LSB)	[31]	[31]	[31]	[31]	[31]
Selection of Setup, msb	(SETUP SELECT MSB)	[32]	[32]	[32]	[32]	[32]
Reset and start	(RESET AND START)	[33]	[33]	[33]	[33]	[33]
Pulse counter start	(PULSE COUNTER START)	[34]	[34]			

1. All functions on terminal 18 and 19 are controlled by an interrupter, which means that the repetitive accuracy of the response time is constant. Can be used for start/stop, setup switch and especially for changing digital preset, i.e. to obtain a reproducable stop point when using creep speed. For further information see VLT 2800 Precise Stop Instruction, MI.28.CX.02.

Function:

In these parameters 302-307 *Digital inputs* it is possible to choose between the different enabled functions related to the digital inputs (terminals 18-33).

Description of choice:

No operation is selected if the frequency converter is not to react to signals transmitted to the terminal.

Reset resets the frequency converter after an alarm; however, a few alarms cannot be reset (trip locked) without first disconnecting the mains supply and reconnecting it. See table under *List of warnings and alarms*. Reset is activated on the leading edge of the signal.

Coasting stop inverse is used for making the frequency converter "let go" of the motor immediately (output

★ = factory setting, () = display text, [] = value for use in communication via serial communication port

transistors are "turned off"), which means that the motor runs freely to stop. Logic '0' leads to coasting to stop.

Reset and coasting inverse are used to activate motor coast simultaneously with reset. Logical '0' means motor coast stop and reset. Reset is activated on the falling edge.

Quick stop inverse is used for activating the quick-stop ramp down set in parameter 212 *Quick stop ramp-down time.* Logic '0' leads to quick stop.

DC-braking inverse is used for stopping the motor by energizing it with a DC voltage for a given time, see parameters 126, 127 and 132 *DC brake*. Please note that this function is only active if the value in parameter 126 *DC braking time* and 132 *DC brake voltage* is different from 0. Logic '0' leads to DC braking.

Stop inverse, a logic '0' means that the motor speed is ramped down to stop via the selected ramp.



None of the stop commands mentioned above are to be used as repair switches. Note that the frequency converter has more voltage inputs than L1, L2 and L3 when the DC bus terminals are used. Check that all voltage inputs are disconnected and that the prescribed time (4 mins.) has passed before repair work is commenced.

Start is selected if a start/stop command is required. Logic '1' = start, logic '0' = stop.

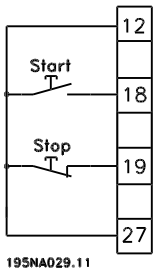

Latched start, if a pulse is applied for min. 14 ms, the frequency converter will start the motor, provided no stop command has been given. The motor can be stopped by briefly activating *Stop inverse*.

Reversing is used for changing the direction of rotation of the motor shaft. Logic '0' will not lead to reversing. Logic '1' will lead to reversing. The reverse signal only changes the direction of rotation, it does not activate the start. Is not active at *Process regulation, closed loop* . See also parameter 200 *Output frequency range/direction*.

Reversing and start is used for start/stop and for reversing with the same signal. No active start command is allowed at the same time. Acts as latch start reversing, provided latch start has been chosen for terminal 18. Is not active for *Process regulation, closed loop*. See also parameter 200 *Output frequency range/direction*.

Start clockwise is used if you want the motor shaft only to be able to rotate clockwise when started. Should not be used for *Process regulation, closed loop*.

Start anticlockwise is used if you want the motor shaft only to be able to rotate anticlockwise when started. Should not be used for *Process regulation, closed loop*. See also parameter 200 *Output frequency range/direction*.

Jog is used to override the output frequency to the jog frequency set in parameter 213 *Jog frequency*. Jog is active regardless of whether a start command has been given, yet not when *Coast stop*, *Quick-stop* or *DC braking* are active.

Freeze reference freezes the present reference. The reference can now only be changed via *Speed up* and *Speed down*. If *freeze reference* is active, it will be saved after a stop command and in the event of mains failure.

Freeze output freezes the present output frequency (in Hz). The output frequency can now only be changed via *Speed up* and *Speed down* .



NB!
If *Freeze output* is active the frequency converter can only be stopped if you select *Motor coast*, *Quick stop* or *DC braking* via a digital input.

Speed up and *Speed down* are selected if digital control of the up/down speed is required. This function is only active if *Freeze reference* or *Freeze output frequency* has been selected.
If *Speed up* is active the reference or output frequency will be increased, and if *Speed down* is active the reference or output frequency will be reduced. The output frequency is changed via the preset ramp times in parameters 209-210 *Ramp 2*.
One pulse (logic '1' minimum high for 14 ms and a minimum break time of 14 ms) will lead to a speed change of 0.1 % (reference) or 0.1 Hz (output frequency). Example:

★ = factory setting, () = display text, [] = value for use in communication via serial communication port

Term .29	Term. 33	Freeze ref/ freeze outp.	Function
0	0	1	No speed change
0	1	1	Speed up
1	0	1	Speed down
1	1	1	Speed down

Freeze reference can be changed even if the frequency converter has stopped. The reference will also be saved if the mains are disconnected.

Catch-up/Slow-down is selected if the reference value is to be increased or reduced by a programmable percentage value set in parameter 219 *Catch-up/Slow-down reference* .

Slow-down	Catch-up	Function
0	0	Unchanged speed
0	1	Increase by % value
1	0	Reduce by % value
1	1	Reduce by % value

Ramp 2 is selected if a shift between ramp 1 (parameters 207-208) and ramp 2 (parameters 209-210) is required. Logic '0' leads to ramp 1 and logic '1' leads to ramp 2.

Preset reference, lsb and *Preset reference, msb* makes it possible to select one of the four preset references, see the table below:

Preset ref. msb	Preset ref. lsb	Function
0	0	Preset ref. 1
0	1	Preset ref. 2
1	0	Preset ref. 3
1	1	Preset ref. 4

Preset reference on is used for shifting between remote-controlled reference and preset reference. It is assumed that External/preset [2] has been selected in parameter 214 *Reference function*. Logic '0' = remote-controlled references are active, logic '1' = one of the four preset references is active, as can be seen from the table above.

Thermistor is to be selected if a possibly integrated thermistor in the motor is to be able to stop the frequency converter if the motor overheats. The cut-out value is 3 kΩ.

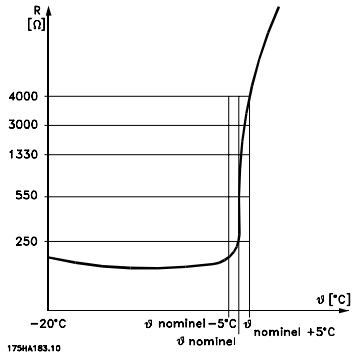

If a motor features a Klixon thermal switch instead, this can also be connected to the input. If motors operate in parallel, the thermistors/thermal switches can be connected in series (total resistance lower than 3 kΩ). Parameter 128 *Motor thermal protection* must be programmed for *Thermistor warning* [1] or *Thermistor trip* [2] and the thermistor is to be connected between a digital input and terminal 50 (+ 10 V supply).

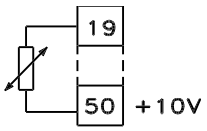

195NA077.10

Precise stop, inverse is selected to obtain a high degree of accuracy when a stop command is repeated. A logic 0 means that the motor speed is ramped down to stop via the selected ramp.

Precise start/stop is selected to obtain a high degree of accuracy when a start and stop command is repeated.

Pulse reference is selected if the reference signal applied is a pulse train (frequency). 0 Hz corresponds to parameter 204 *Minimum reference, Ref_{MIN}* . The frequency set in parameter 327 *Pulse reference/feedback* corresponds to parameter 205 *Maximum reference Ref_{MAX}* .

Pulse feedback is selected if the feedback signal used is a pulse train (frequency). In parameter 327 *Pulse reference/feedback* the maximum pulse feedback frequency is set.

Pulse input is selected if a specific number of pulses must lead to a *Precise stop*, see parameter 343 *Precise stop* and parameter 344 *Counter value*.

Selection of Setup, lsb and *Selection of Setup, msb* gives the possibility to select one of the four setups. It is, however, a condition that parameter 004 is set to *Multisetup*.

Reset and start can be used as a start function. If 24 V are connected to the digital input, this will cause the

★ = factory setting, () = display text, [] = value for use in communication via serial communication port

frequency converter to reset and the motor will ramp up to the preset reference.

Pulse counter start is used to start a counter stop sequence with a pulse signal. The pulse width must at least be 14 ms and not longer than the count period. See also parameter 343 and the instruction, MI28CXYY.

---

308 Terminal 53, analogue input voltage
(AI [V]53FUNCT.)

Value:

	No function (NO OPERATION)	[0]
★	Reference (reference)	[1]
	Feedback (feedback)	[2]
	Wobble (WOBB.DELTA FREQ [%])	[10]

Function:

In this parameter it is possible to select the function required to be connected to terminal 53. Scaling of the input signal is made in parameter 309 *Terminal 53, min. scaling* and parameter 310 *Terminal 53, max. scaling*.

Description of choice:

No function [0]. Is selected if the frequency converter is not to react to signals connected to the terminal.
Reference [1]. If this function is selected, the reference can be changed by means of an analogue reference signal. If reference signals are connected to more than one input, these reference signals must be added up.If a voltage feedback signal is connected, select *Feedback* [2] on terminal 53.
Wobble [10]
The delta frequency can be controlled by the analog input. If *WOBB.DELTA FREQ* is selected as analog input (par. 308 or par. 314) the value selected in par. 702 equals 100 % analog input.
Example: Analog input = 4-20 mA, Delta freq. par. 702 = 5 Hz • 4 mA = 0 Hz and 20 mA = 5 Hz. If this function is chosen, see Wobble Instruction MI28JXYY for further information.

---

309 Terminal 53 Min. scaling
(AI 53 SCALE LOW)

Value:

0.0 - 10.0 Volt	★ 0.0 Volt

Function:

This parameter is used for setting the signal value that is to correspond to the minimum reference or the minimum feedback, parameter 204 *Minimum reference, Ref_{MIN}* / 414 *Minimum feedback, FB_{MIN}*.

Description of choice:

Set the required voltage value. For reasons of accuracy, compensation should be made for voltage loss in long signal cables. If the Time out function is to be used (parameter 317 *Time out* and 318 *Function after time out*), the value set must be higher than 1 Volt.

---

310 Terminal 53 Max. scaling
(AI 53 SCALE HIGH)

Value:

0 - 10.0 Volt	★ 10.0 Volt

Function:

This parameter is used for setting the signal value that is to correspond to the maximum reference value or maximum feedback, parameter 205 *Maximum reference, Ref_{MAX}* / 414 *Maximum feedback, FB_{MAX}* .

Description of choice:

Set the required voltage value. For reasons of accuracy, compensation should be made for voltage losses in long signal cables.

---

314 Terminal 60, analogue input current
(AI [mA] 60 FUNCT)

Value:

	No function (no operation)	[0]
	Reference (reference)	[1]
★	Feedback (feedback)	[2]
	Wobble (WOBB.DELTA FREQ [%])	[10]

Function:

This parameter allows a choice between the different functions available for the input, terminal 60. Scaling of the input signal is effected in parameter 315 *Terminal 60, min. scaling* and parameter 316 *Terminal 60, max. scaling*.

Description of choice:

No function [0]. Is selected if the frequency converter is not to react to signals connected to the terminal.
Reference [1]. If this function is selected, the reference can be changed by means of an analogue reference

signal. If reference signals are connected to more than one input, these reference signals must be added up. If one current feedback signal is connected, select *Feedback* [2] on terminal 60.
Wobble [10]
The delta frequency can be controlled by the analog input. If *WOBB.DELTA FREQ* is selected as analog input (par. 308 or par. 314) the value selected in par. 702 equals 100 % analog input.
Example: Analog input = 4-20 mA, Delta freq. par. 702 = 5 Hz • 4 mA = 0 Hz and 20 mA = 5 Hz. If this function is chosen, see Wobble Instruction MI28JXYY for further information.

315 Terminal 60 Min. scaling
(AI 60 SCALE LOW)

Value:

0.0 - 20.0 mA ★ 4.0 mA

Function:

In this parameter you can set the signal value that will correspond to the minimum reference or minimum feedback, parameter 204 *Minimum reference, Ref_{MIN}* / 414 *Minimum feedback, FB_{MIN}* .

Description of choice:

Set the required current value. If the Time out function is to be used (parameter 317 *Time out* and 318 *Function after time out*) the value set must be higher than 2 mA.

316 Terminal 60 Max. scaling
(AI 60 SCALE HIGH)

Value:

0.0 - 20.0 mA ★ 20.0 mA

Function:

This parameter is used for setting the signal value that is to correspond to the maximum reference value, parameter 205 *Maximum reference value, Ref_{MAX}* .

Description of choice:

Set the required current value.

317 Time out
(LIVE ZERO TIME O)

Value:

1 - 99 sec. ★ 10 sec.

Function:

If the signal value of the reference or feedback signal connected to one of the input terminals 53 or 60 falls below 50 % of the minimum scaling for a period longer than the time set, the function selected in parameter 318 *Function after time out* will be activated. This function is only active if in parameter 309 *Terminal 53, min. scaling* a value higher than 1 Volt has been selected, or if in parameter 315 *Terminal 60, min. scaling* a value higher than 2 mA has been selected.

Description of choice:

Set the required time.

318 Function after time out
(LIVE ZERO FUNCT.)

Value:

★ No operation (NO OPERATION)	[0]
Freeze output frequency (FREEZE OUTPUT FREQ.)	[1]
Stop (stop)	[2]
Jog (jog)	[3]
Max. speed (MAX SPEED)	[4]
Stop and trip (STOP AND TRIP)	[5]

Function:

This parameter allows a choice of the function to be activated after the expiry of the Time out (parameter 317 *Time out*). If a time-out function occurs at the same time as a bus time-out function (parameter 513 *Bus time interval function*), the time-out function in parameter 318 will be activated.

Description of choice:

The output frequency of the frequency converter can be:

- frozen at the present frequency [1]
- overruled to stop [2]
- overruled to jog frequency [3]
- overruled to max. output frequency [4]
- overruled to stop with subsequent trip [5]

Programming

★ = factory setting, () = display text, [] = value for use in communication via serial communication port

319 Analogue output terminal 42 (AO 42 FUNCTION)

Value:

	No function (NO OPERATION)	[0]
	External reference min.-max. 0-20 mA (ref min-max = 0-20 mA)	[1]
	External reference min.-max. 4-20 mA (ref min-max = 4-20 mA)	[2]
	Feedback min.-max. 0-20 mA (fb min-max = 0-20 mA)	[3]
	Feedback min.-max. 4-20 mA (fb min-max = 4-20 mA)	[4]
	Output frequency 0-max 0-20 mA (0-fmax = 0-20 mA)	[5]
	Output frequency 0-max 4-20 mA (0-fmax = 4-20 mA)	[6]
★	Output current 0-I_{INV} 0-20 mA (0-iinv = 0-20 mA)	[7]
	Output current 0-I_{IINV} 4-20 mA (0-iinv = 4-20 mA)	[8]
	Output power 0-$P_{M,N}$ 0-20 mA (0-Pnom = 0-20 mA)	[9]
	Output power 0-$P_{M,N}$ 4-20 mA (0-Pnom = 4-20 mA)	[10]
	Inverter temperature 20-100 °C 0-20 mA (TEMP 20-100 C=0-20 mA)	[11]
	Inverter temperature 20-100 °C 4-20 mA (TEMP 20-100 C=4-20 mA)	[12]

Function:

The analogue output can be used for stating a process value. It is possible to choose two types of output signals 0 - 20 mA or 4 - 20 mA.
If used as a voltage output (0 - 10 V), a pull-down resistor of 500 Ω must be fitted to common (terminal 55).
If the output is used as a current output the resulting resistance from the equipment connected may not exceed 500 Ω.

Description of choice:

No function. Is selected if the analogue output is not to be used.

External Ref_{MIN} - Ref_{MAX} 0-20 mA/4-20 mA.
An output signal is obtained, which is proportional to the resulting reference value in the interval Minimum reference, Ref_{MIN} - Maximum reference, Ref_{MAX} (parameters 204/205).

FB_{MIN}-FB_{MAX} 0-20 mA/ 4-20 mA.
An output signal is obtained, which is proportional to the feedback value in the interval Minimum feedback, FB_{MIN} - Maximum feedback, FB_{MAX} (parameter 414/415).

0-f_{MAX} 0-20 mA/4-20 mA.
An output signal is obtained, which is proportional to the output frequency in the interval 0 - f_{MAX} (parameter 202 *Output frequency, high limit, f_{MAX}*).

0 - I_{INV} 0-20 mA/4-20 mA.
An output signal is obtained, which is proportional to the output current in the interval 0 - I_{INV}

0 - $P_{M,N}$ 0-20 mA/4-20 mA.
An output signal is obtained, which is proportional to the present output power. 20 mA corresponds to the value set in parameter 102 *Motor power, $P_{M,N}$.*

0 - Temp.$_{MAX}$ 0-20 mA/4-20 mA.
An output signal is obtained, which is proportional to the present heatsink temperature. 0/4 mA corresponds to a heatsink temperature of less than 20 °C, and 20 mA corresponds to 100 °C.

323 Relay output 1-3 (RELAY 1-3 FUNCT.)

Value:

	No function (no operation)	[0]
★	Unit ready (unit ready)	[1]
	Enable/no warning (enable/no warning)	[2]
	Running (RUNNING)	[3]
	Running in reference, no warning (run on ref/no warn)	[4]
	Running, no warnings (RUNNING/NO WARNING)	[5]
	Running in reference range, no warnings (RUN IN RANGE/ NO WARN)	[6]
	Ready - mains voltage within range (RDY NO OVER/UNDERVOL)	[7]
	Alarm or warning (ALARM OR WARNING)	[8]
	Current higher than current limit, par. 221 (Current limit)	[9]
	Alarm (ALARM)	[10]
	Output frequency higher than f_{LOW} par. 225 (above frequency low)	[11]
	Output frequency lower than f_{HIGH} par. 226 (below frequency high)	[12]
	Output current higher than I_{LOW} par. 223 (above current low)	[13]

★ = factory setting, () = display text, [] = value for use in communication via serial communication port

Output current lower than I_{HIGH} par. 224 (below current high)	[14]
Feedback higher than FB_{LOW} par. 227 (above feedback low)	[15]
Feedback lower than FB_{HIGH} par. 228 (under feedback high)	[16]
Relay 123 (RELAY 123)	[17]
Reversing (REVERSE)	[18]
Thermal warning (THERMAL WARNING)	[19]
Local operation (LOCAL MODE)	[20]
Out of frequency range par. 225/226 (out of freq range)	[22]
Out of current range (out of current range)	[23]
Out of feedback range (out of fdbk. range)	[24]
Mechanical brake control (Mech. brake control)	[25]
Control word bit 11 (control word bit 11)	[26]

Function:

The relay output can be used for giving the present status or warning. The output is activated (1-2 make) when a given condition is fulfilled.

Description of choice:

No function. Is selected if the frequency converter is not to react to signals.

Unit ready, there is a supply voltage on the control card of the frequency converter, and the frequency converter is ready for operation.

Enable, no warning, the frequency converter is ready for operation, but no start command has been given. No warning.

Running is active when there is a start command or the output frequency is above 0.1 Hz. Also active during ramp-down.

Running in reference, no warning speed according to reference.

Running, no warning, a start command has been given. No warning.

Ready - mains voltage within range, the frequency converter is ready for use; the control card is receiving a supply voltage; and there are no active control signals on the inputs. The mains voltage lies within the voltage limits.

Alarm or warning, the output is activated by an alarm or warning.

Current limit, the output current is higher than the value programmed in parameter 221 Current limit I_{LIM}.

Alarm, The output is activated by an alarm.

Output frequency higher than f_{LOW} , the output frequency is higher than the value set in parameter 225 *Warning: Low frequency, f_{LOW}* .

Output frequency lower than f_{HIGH}, the output frequency is lower than the value set in parameter 226 *Warning: High frequency, f_{HIGH}* .

Output current higher than I_{LOW} , the output current is higher than the value set in parameter 223 *Warning: Low current, I_{LOW}* .

Output current lower than I_{HIGH} , the output current is lower than the value set in parameter 224 *Warning: High current, I_{HIGH}* .

Feedback higher than FB_{LOW} , the feedback value is higher than the value set in parameter 227 *Warning: Low feedback, FB_{LOW}* .

Feedback lower than FB_{HIGH} , the feedback value is lower than the value set in parameter 228 *Warning: High current, I_{HIGH}* .

Relay 123 is only used in connection with Profidrive.

Reversing, The relay output is activated when the direction of motor rotation is anti-clockwise. When the direction of motor rotation is clockwise, the value is 0 V DC.

Thermal warning, above the temperature limit in either the motor or the frequency converter, or from a thermistor connected to a digital input.

Local operation, the output is active when in parameter 002 *Local/remote operation, Local operation* [1] has been selected.

Out of the frequency range, the output frequency is out of the programmed frequency range in parameters 225 and 226.

Out of the current range, the motor current is out of the programmed range in parameters 223 and 224.

Out of the feedback range, the feedback signal is out of the programmed range in parameters 227 and 228.

Mechanical brake control, enables you to control an external mechanical brake (see section about control of mechanical brake in the VLT 2800 Design Guide).

★ = factory setting, () = display text, [] = value for use in communication via serial communication port

327 Pulse reference/feedback (PULSE REF/FB MAX)

Value:

150 - 67600 Hz ★ 5000 Hz

Function:

This parameter is used for setting the signal value that corresponds to the maximum value set in parameter 205 *Maximum reference, Ref_{MAX}* or to the maximum feedback value set in parameter 415 *Maximum feedback, FB_{MAX}* .

Description of choice:

Set the required pulse reference or pulse feedback to be connected to terminal 33.

---

328 Maximum Pulse 29 (MAX PULSE 29)

Value:

150 - 67600 Hz ★ 5000 Hz

Function:

This parameter is used for setting the signal value that corresponds to the maximum value set in parameter 205 *Maximum reference, Ref_{MAX}* or to the maximum feedback value set in parameter 415 *Maximum feedback, FB_{MAX}* .

NB!
Only relevant for DeviceNet. See MG90BXYY for further information.

---

341 Digital / pulse output terminal 46 (DO 46 FUNCTION)

Value:

Unit ready (UNIT READY)	[0]
Parameter [0] - [20] see parameter 323	
Pulse reference (PULSE REFERENCE)	[21]
Parameter [22] - [25] see parameter 323	
Pulse feedback (PULSE FEEDBACK)	[26]
Output frequency (PULSE OUTPUTFREQ)	[27]
Pulse current (PULSE CURRENT)	[28]
Pulse power (PULSE POWER)	[29]
Pulse temperature (PULSE TEMP)	[30]

Function:

The digital output can be used for giving the present status or warning. The digital output (terminal 46) gives a 24 V DC signal when a given condition is fulfilled. Terminal can also be used for frequency output. Parameter 342 sets the maximum pulse frequency.

Description of choice:

Pulse reference Ref_{MIN} - Ref_{MAX}
An output signal is obtained, which is proportional to the resulting reference value in the interval Minimum reference, Ref_{MIN} - Maximum reference, Ref_{MAX} (parameters 204/205).

Pulse feedback FB_{MIN}-FB_{MAX} .
An output signal is obtained, which is proportional to the feedback value in the interval Minimum feedback, FB_{MIN} - Maximum feedback, FB_{MAX} (parameter 414/415).

Output frequency 0-f_{MAX}.
An output signal is obtained, which is proportional to the output frequency in the interval 0 - f_{MAX} (parameter 202 *Output frequency, high limit, f_{MAX}*).

Pulse current 0 - I_{INV}..
An output signal is obtained, which is proportional to the output current in the interval 0 - I_{INV}.

Pulse power 0 - $P_{M,N}$.
An output signal is obtained, which is proportional to the present output power. Par. 342 corresponds to the value set in parameter 102 *Motor power, $P_{M,N}$.*

Pulse temperature 0 - $Temp._{MAX}$.
An output signal is obtained, which is proportional to the present heatsink temperature. 0 Hz corresponds to a heatsink temperature of less than 20° C, and parameter 342 corresponds to 100° C.

NB!
Output terminal 46 is not available on DeviceNet. Minimum output frequency at frequency output = 16 Hz

---

342 Terminal 46, max. pulse scaling (DO 46 MAX. PULS)

Value:

150 - 10000 Hz ★ 5000 Hz

Function:

This parameter is used for setting the pulse output signal's maximum frequency.

★ = factory setting, () = display text, [] = value for use in communication via serial communication port

Description of choice:
Set the required frequency.

---

343 Precise stop function
(Precise stop)

Value:

★ Precise ramp stop (normal)	[0]
Counter stop with reset (Count stop reset)	[1]
Counter stop without reset (Count stop no reset)	[2]
Speed-compensated stop (Spd cmp stop)	[3]
Speed-compensated counter stop with reset (Spd cmp cstop w. res)	[4]
Speed-compensated counter stop without reset (Spd cmp cstop no res)	[5]

Function:
In this parameter you select which stop function is performed in response to a stop command. All six data selections contain a precise stop routine, thus ensuring a high level of repeat accuracy.
The selections are a combination of the functions described below.



NB!
Pulse start [8] may not be used together with the precise stop function.

Description of choice:
Precise ramp stop [0] is selected to achieve high repetitive precision at the stopping point.
Counter stop. Once it has received a pulse start signal the frequency converter runs until the number of pulses programmed by the user have been received at input terminal 33. In this way an internal stop signal will activate the normal ramp down time (parameter 208). The counter function is activated (starts timing) at the flank of the start signal (when it changes from stop to start).
Speed compensated stop. To stop at precisely the same point, regardless of the present speed, a stop signal received is delayed internally when the present speed is lower than the maximum speed (set in parameter 202).
Reset. *Counter stop* and *Speed-compensated stop* can be combined with or without reset.

Counter stop with reset [1]. After each precise stop the number of pulses counted during ramp down 0 Hz is reset.
Counter stop without reset [2]. The number of pulses counted during ramp down to 0 Hz is deducted from the counter value in parameter 344.

---

344 Counter value
(Pulse count pre.)

Value:

0 - 999999	★ 100000 pulses

Function:
In this parameter you can select the counter value to be used in the integrated precise stop function (parameter 343).

Description of choice:
The factory setting is 100000 pulses. The highest frequency (max. resolution) that can be registered at terminal 33 is 67.6 kHz.

---

349 Speed comp delay
(SPEED COMP DELAY)

Value:

0 ms - 100 ms	★ 10 ms

Function:
In this parameter the user can set the SYSTEM's delay time (Sensor, PLC, etc.). If you are running speed-compensated stop, the delay time at different frequencies has a major influence on the way in which you stop.

Description of choice:
The factory setting is 10 ms. This means that it is assumed that the total delay from the Sensor, PLC and other hardware corresponds to this setting.



NB!
Only active for speed-compensated stop.

★ = factory setting, () = display text, [] = value for use in communication via serial communication port

■ Special functions

400 Brake function
(Brake function)

Value:

Off (off)	[0]
Resistor brake (Resistor)	[1]
AC brake (AC Brake)	[4]
Load sharing (load sharing)	[5]

Factory setting depends on unit type.

Function:

Resistor brake [1] is selected if the frequency converter has an integral brake transistor and brake resistor is connected to terminals 81, 82. A higher intermediate circuit voltage is permitted during braking (generated operation) when a brake resistor is connected.
AC brake [4] can be selected to improve braking without using brake resistors. Please note that *AC brake* [4] is not as effective as *Resistor brake* [1].

Description of choice:

Select *Resistor brake* [1] if a brake resistor is connected.
Select *AC brake* [4] if short-term generated loads occur. See parameter 144 *Gain AC brake* to set the brake.

Select *Load sharing* [5] if this is used.

NB!
A change of selection will not become active until the mains voltage has been disconnected and reconnected.

---

405 Reset function
(reset mode)

Value:

★ Manual reset (manual reset)	[0]
Automatic reset x 1 (AUTOMATIC x 1)	[1]
Automatic reset x 3 (AUTOMATIC x 3)	[3]
Automatic reset x 10 (AUTOMATIC x 10)	[10]
Reset at power-up (RESET AT POWER UP)	[11]

Function:

This parameter makes it possible to select whether reset and restart after a trip are to be manual or whether the frequency converter is to be reset and restarted automatically. Furthermore, it is possible to select the number of times a restart is to be attempted. The time between each attempt is set in parameter 406 *Automatic restart time*.

Description of choice:

If *Manual reset* [0] is selected, reset is to be carried out via the [STOP/RESET] key, a digital input or serial communication. If the frequency converter is to carry out an automatic reset and restart after a trip, select data value [1], [3] or [10].
If *Reset at power-up* [11] is selected, the frequency converter will carry out a reset if there has been a fault in connection with the mains failure.

The motor may start without warning.

---

406 Automatic restart time
(autorestart time)

Value:

0 - 10 sec.	★ 5 sec.

Function:

This parameter allows setting of the time from tripping until the automatic reset function begins. It is assumed that automatic reset has been selected in parameter 405 *Reset function*.

Description of choice:

Set the required time.

---

409 Trip delay overcurrent, I_{LIM}
(trip delay cur.)

Value:

0 - 60 sec. (61=OFF)	★ OFF

Function:

When the frequency converter registers that the output current has reached the current limit I_{LIM} (parameter 221 *Current limit*) and remains there for the preset time, it is disconnected. Can be used to protect the application, like the ETR will protect the motor if selected.

Description of choice:

Select how long the frequency converter should maintain the output current at the current limit I_{LIM} before it disconnects. At OFF parameter 409 *Trip delay overcurrent, I_{LIM}* is not working, i.e. disconnection will not take place.

---

411 Switching frequency (Switch freq.)

Value:

3000 - 14000 Hz (VLT 2803 - 2875) ★ 4500 Hz

3000 - 10000 Hz (VLT 2880 - 2882) ★ 4500 Hz

Function:

The set value determines the switching frequency of the inverter. If the switching frequency is changed, this may help to minimise possible acoustic noise from the motor.



NB!
The output frequency of the frequency converter can never assume a value higher than 1/10 of the switching frequency.

Description of choice:

When the motor is running, the switching frequency is adjusted in parameter 411 *Switching frequency* until the frequency has been obtained at which the motor is as low-noise as possible.



NB!
The switching frequency is reduced automatically as a function of the load. See *Temperature-Dependent Switching Frequency* under *Special Conditions* .
When *LC-filter connected* is selected in parameter 412, the minimum switching frequency is 4.5 kHz.

---

412 Variable switching frequency (Var carrier freq.)

Value:

★ Without LC-filter (WITHOUT LC-FILTER) [2]

LC-filter connected (LC-filter connected) [3]

Function:

The parameter must be set to *LC-filter connected* if an LC-filter is connected between the frequency converter and the motor.

Description of choice:

The LC-filter connected [3] must be used if an LC-filter is connected between the frequency converter and the motor, as otherwise the frequency converter cannot protect the LC-filter.



NB!
When the LC filter is selected the switching frequency is changed to 4.5 kHz.

---

413 Overmodulation function (OVERMODULATION)

Value:

Off (off) [0]

★ On (on) [1]

Function:

This parameter allows connection of the overmodulation function for the output voltage.

Description of choice:

Off [0] means that there is no overmodulation of the output voltage, which means that torque ripple on the motor shaft is avoided. This can be a good feature, e.g. on grinding machines. *On* [1] means that an output voltage can be obtained which is greater than the mains voltage (up to 5 %).

---

414 Minimum feedback, FB_{MIN} (Min. feedback)

Value:

-100,000.000 - par. 415 FB_{MAX} ★ 0.000

Function:

Parameter 414 *Minimum feedback, FB_{MIN}* and 415 *Maximum feedback, FB_{MAX}* are used to scale the display text to make it show the feedback signal in a process unit proportionally to the signal on the input.

Description of choice:

Set the value to be shown on the display as the minimum feedback signal value on the selected feedback input (parameters 308/314 *Analogue inputs*).

★ = factory setting, () = display text, [] = value for use in communication via serial communication port

415 Maximum feedback, FB_{MAX}
(Max. feedback)

Value:

FB_{MIN} - 100,000.000 ★ 1500.000

Function:

See description of parameter 414 *Minimum feedback, FB_{MIN}* .

Description of choice:

Set the value to be shown on the display when the maximum feedback has been obtained on the selected feedback input (parameter 308/314 *Analogue inputs*).

416 Process units
(REF/FEEDB. UNIT)

Value:

★ No unit (No unit)	[0]
% (%)	[1]
ppm (ppm)	[2]
rpm (rpm)	[3]
bar (bar)	[4]
Cycles/min (CYCLE/MI)	[5]
Pulses/s (PULSE/S)	[6]
Units/s (UNITS/S)	[7]
Units/min. (UNITS/MI)	[8]
Units/h (Units/h)	[9]
°C (°C)	[10]
Pa (pa)	[11]
l/s (l/s)	[12]
m^3/s (m3/s)	[13]
l/min. (l/m)	[14]
m^3/min. (m3/min)	[15]
l/h (l/h)	[16]
m^3/h (m3/h)	[17]
Kg/s (kg/s)	[18]
Kg/min. (kg/min)	[19]
Kg/hour (kg/h)	[20]
Tons/min. (T/min)	[21]
Tons/hour (T/h)	[22]
Metres (m)	[23]
Nm (nm)	[24]
m/s (m/s)	[25]
m/min. (m/min)	[26]
°F (°F)	[27]
In wg (in wg)	[28]
gal/s (gal/s)	[29]
Ft^3/s (ft3/s)	[30]
Gal/min. (gal/min)	[31]
Ft^3/min. (Ft3/min)	[32]
Gal/h (gal/h)	[33]
Ft^3/h (Ft3/h)	[34]
Lb/s (lb/s)	[35]
Lb/min. (lb/min)	[36]
Lb/hour (lb/h)	[37]
Lb ft (lb ft)	[38]
Ft/s (ft/s)	[39]
Ft/min. (ft/min)	[40]
Psi (Psi)	[41]

Function:

Select among different units to be shown on the display. The unit is read out if an LCP control unit can be connected, and if *Reference [unit]* [2] or *Feedback [unit]* [3] has been selected in one of parameters 009-012 *Display read-out*, and in Display mode. The unit is used in *Closed loop* also as a unit for Minimum/Maximum reference and Minimum/Maximum feedback.

Description of choice:

Select the required unit for the reference/feedback signal.

NB!
Parameters 417-421 are only used, if in parameter 100 *Configuration* the selection made is *Speed regulation, closed loop* [1].

417 Speed PID proportional gain
(SPEED PROP GAIN)

Value:

0.000 (OFF) - 1.000 ★ 0.010

Function:

Proportional gain indicates how many times the fault (deviation between the feedback signal and the set-point) is to be amplified.

Description of choice:

Quick regulation is obtained at high amplification, but if the amplification is too high, the process may become unstable in the case of overshooting.

★ = factory setting, () = display text, [] = value for use in communication via serial communication port

418 Speed PID integral time (SPEED int. time)

Value:

20.00 - 999.99 ms (1000 = OFF) ✯ 100 ms

Function:

The integral time determines how long the PID regulator takes to correct the error. The greater the error, the quicker the integrator frequency contribution will increase. The integral time is the time the integrator needs to achieve the same change as the proportional amplification.

Description of choice:

Quick regulation is obtained through a short integral time. However, if this time is too short, it can make the process unstable. If the integral time is long, major deviations from the required reference may occur, since the process regulator will take long to regulate if an error has occurred.

---

419 Speed PID differential time (SPEED diff. time)

Value:

0.00 (OFF) - 200.00 ms ✯ 20.00 ms

Function:

The differentiator does not react to a constant error. It only makes a contribution when the error changes. The quicker the error changes, the stronger the gain from the differentiator will be. The contribution is proportional to the speed at which errors change.

Description of choice:

Quick control is obtained by a long differential time. However, if this time is too long, it can make the process unstable. When the differential time is 0 ms, the D-function is not active.

---

420 Speed PID D- gain limit (SPEED D-GAIN LIM)

Value:

5.0 - 50.0 ✯ 5.0

Function:

It is possible to set a limit for the gain provided by the differentiator. Since the D-gain increases at higher frequencies, limiting the gain may be useful. This enables obtaining a pure D-gain at low frequencies and a constant D-gain at higher frequencies.

Description of choice:

Select the required gain limit.

---

421 Speed PID lowpass filter time (speed filt. time)

Value:

20 - 500 ms ✯ 100 ms

Function:

Noise in the feedback signal is dampened by a first order lowpass filter to reduce the noise's impact on the regulation. This might be an advantage, e.g. if there is a great amount of noise on the signal. See drawing.

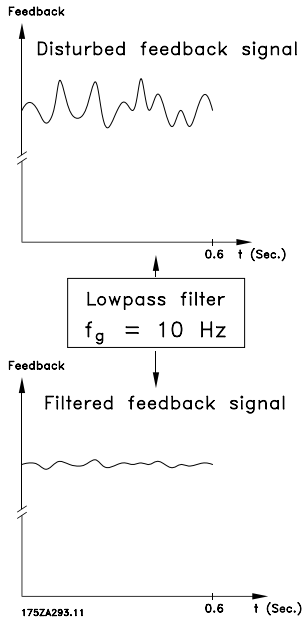

Description of choice:

If a time constant (t) of 100 ms is programmed, the cut-off frequency for the lowpass filter will be 1/0.1 = 10 RAD/sec., corresponding to (10 / 2 x π) = 1.6 Hz. The PID regulator will then only regulate a feedback signal that varies with a frequency of less than 1.6 Hz. If the feedback signal varies by a higher frequency than 1.6 Hz, it will be dampened by the lowpass filter.

---

423 U1 voltage (U1 voltage)

Value:

0.0 - 999.0 V ✯ par. 103

Function:

Parameters 423-428 are used when in parameter 101 *Torque characteristic* a selection has been made of

Special motor characteristic [8]. It is possible to determine a U/f characteristic on the basis of four definable voltages and three frequencies. The voltage at 0 Hz is set in parameter 133 *Start voltage*.

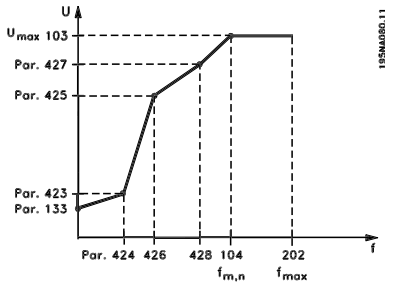

Description of choice:

Set the output voltage (U1) that is to match the first output frequency (F1), parameter 424 *F1 frequency*.

---

424 F1 frequency

(F1 frequency)

Value:

0.0 - par. 426 *F2 frequency* ★ Par. 104 *Motor frequency*

Function:

See parameter 423 *U1 voltage* .

Description of choice:

Set the output frequency (F1) that is to match the first output voltage (U1), parameter 423 *U1 voltage* .

---

425 U2 voltage

(U2 voltage)

Value:

0.0 - 999.0 V ★ par. 103

Function:

See parameter 423 *U1 voltage*.

Description of choice:

Set the output voltage (U2) that is to match the second output frequency (F2), parameter 426 *F2 frequency*.

---

426 F2 frequency

(F2 frequency)

Value:

Par. 424 *F1 frequency* - par. 428 *F3 frequency* ★ Par. 104 *Motor frequency*

Function:

See parameter 423 *U1 voltage*.

Description of choice:

Set the output frequency (F2) that is to match the second output voltage (U2), parameter 425 *U2 voltage* .

---

427 U3 voltage

(U3 voltage)

Value:

0.0 - 999.0 V ★ par. 103

Function:

See parameter 423 *U1 voltage*.

Description of choice:

Set the output voltage (U3) that is to match the third output frequency (F3), parameter 428 *F3 frequency* .

---

428 F3 frequency

(F3 frequency)

Value:

Par. 426 *F2 frequency* - 1000 Hz ★ Par. 104 *Motor frequency*

Function:

See parameter 423 *U1 voltage*.

Description of choice:

Set the output frequency (F3) that is to match the third output voltage (U3), parameter 427 *U3 voltage* .

NB!

Parameters 437-444 are only used if in parameter 100 *Configuration* a selection has been made of *Process regulation, closed loop.* [3].

---

437 Process PID normal/inverse control

(proc no/inv ctrl)

Value:

★ Normal (normal)	[0]
Inverse (inverse)	[1]

Function:

It is possible to choose whether the process regulator is to increase/reduce the output frequency if there is a

★ = factory setting, () = display text, [] = value for use in communication via serial communication port

deviation between the reference/setpoint and the actual process mode.

Description of choice:

If the frequency converter is to reduce the output frequency in case the feedback signal increases, select *Normal* [0].If the frequency converter is to increase the output frequency in case the feedback signal increases, select *Inverse* [1].

---

438 Proces PID anti windup (proc anti windup)

Value:

Not active (DISABLE) [0]

★ Active (ENABLE) [1]

Function:

It is possible to select whether the process regulator is to continue regulating on a deviation even if it is not possible to increase/reduce the output frequency.

Description of choice:

The factory setting is *Enable* [1], which means that the integration link is initialised in relation to the actual output frequency if either the current limit, the voltage limit or the max./min. frequency has been reached. The process regulator will not engage again until either the error is zero or its sign has changed. Select *Disable* [0] if the integrator is to continue integrating on the deviation, even if it is not possible to remove the fault by such control.

NB!

If *Disable* [0] is selected, it will mean that when the deviation changes its sign, the integrator will first have to integrate down from the level obtained as a result of the former error, before any change in output frequency occurs.

---

439 Process PID start frequency (PROC START VALUE)

Value:

f_{MIN} - f_{MAX} (parameter 201/202) ★ Par. 201 *Output frequency, low limit, f_{MIN}*

Function:

When the start signal comes, the frequency converter will react in the form of *Open loop* and will not change to *Closed loop* until the programmed start frequency is reached. This makes it possible to set a frequency that corresponds to the speed at which the process normally runs, which will enable the required process conditions to be reached sooner.

Description of choice:

Set the required start frequency.

NB!

If the frequency converter is running a the current limit before the required start frequency is obtained, the process regulator will not be activated. For the regulator to be activated anyway, the start frequency must be lower to the required output frequency. This can be done during operation.

---

440 Proces PID proportioanl gain (PROC. PROP. GAIN)

Value:

0.0 - 10.00 ★ 0.01

Function:

The proportional gain indicates the number of times the deviation between the setpoint and the feedback signal is to be applied.

Description of choice:

Quick regulation is obtained by a high gain, but if the gain is too high, the process may become unstable due to overshoot.

---

441 Process PID integration time (PROC. INTEGR. T.)

Value:

0.01 - 9999.99 (OFF) ★ OFF

Programming

★ = factory setting, () = display text, [] = value for use in communication via serial communication port

Function:

The integrator provides an increasing gain at a constant error between the reference/setpoint and the feedback signal. The greater the error, the quicker the integrator frequency contribution will increase.The integral time is the time needed by the integrator to make the same change as the proportional gain.

Description of choice:

Quick regulation is obtained at a short integral time. However, this time may become too short, which can make the process unstable due to overswing. If the integral time is long, major deviations from the required setpoint may occur, since the process regulator will take a long time to regulate in relation to a given error.

---

442 Process PID differentiation time (PROC. DIFF. time)

Value:

0.00 (OFF) - 10.00 sec. ★ 0.00 sec.

Function:

The differentiator does not react to a constant error. It only makes a gain when an error changes. The quicker the deviation changes, the stronger the gain from the differentiator. The gain is proportional to the speed at which the deviation changes.

Description of choice:

Quick regulation is obtained with a long differentiation time. However, this time may become too long, which can make the process unstable due to overswing.

---

443 Process PID diff. gain limit (PROC. DIFF.GAIN)

Value:

5.0 - 50.0 ★ 5.0

Function:

It is possible to set a limit for the differentiator gain. The differentiator gain will increase if there are fast changes, which is why it can be beneficial to limit this gain. Thereby a pure differentiator gain is obtained at slow changes and a constant differentiator gain where quick changes to the deviation occur.

Description of choice:

Select a differentiator gain limit as required.

---

444 Process PID lowpass filter time (proc filter time)

Value:

0.02 - 10.00 ★ 0.02

Function:

Noise in the feedback signal is dampened by a first order lowpass filter to reduce the noise's impact on the process regulation. This can be an advantage e.g. if there is a lot of noise on the signal.

Description of choice:

Select the required time constant (t). If a time constant (t) of 0.1 s is programmed, the cut-off frequency for the lowpass filter will be 1/0.1 = 10 RAD/sec., corresponding to (10 / 2 x π) = 1.6 Hz. The process regulator will thus only regulate a feedback signal that varies by a frequency lower than 1.6 Hz. If the feedback signal varies by a higher frequency than 1.6 Hz, it will be dampened by the lowpass filter.

---

445 Flying start (flyingstart)

Value:

★ Off (DISABLE)	[0]
OK - same direction (OK-same direction)	[1]
OK - both directions (OK-both directions)	[2]
DC brake and start (DC-BRAKE BEF. START)	[3]

Function:

This function makes it possible to 'catch' a rotating motor shaft, which is no longer controlled by the frequency converter, e.g. because of a mains drop-out. The function is activated each time a start command is enabled. For the frequency converter to be able to 'catch' the rotating motor shaft, the motor speed must be lower than the frequency that corresponds to the frequency in parameter 202 *Output frequency, high limit, f_{MAX}* .

Description of choice:

Select *Disable* [0] if this function is not required.

Select *OK - same direction* [1] if the motor shaft is only able to rotate in the same direction when cutting in. *OK - same direction* [1] should be selected if in parameter

★ = factory setting, () = display text, [] = value for use in communication via serial communication port

200 *Output frequency range* a selection has been of *Clockwise only* .

Select *OK - both directions* [2] if the motor is able to rotate in both directions when cutting in.

Select *DC brake and start* [3] if the frequency converter is to be able to brake the motor using the DC brake first, followed by start. It is assumed that parameters 126-127/132 *DC brake* are enabled. In the case of higher 'Windmilling' (rotating motor) effects, the frequency converter is not able to 'catch' a rotating motor without selecting *DC brake and start* .

Limitations:

- Too low inertia will lead to load acceleration, which can be dangerous or prevent correct catching of a rotating motor. Use the DC brake instead.
- If the load is driven, e.g. by 'Windmilling' (rotating motor) effects, the unit may cut out because of overvoltage.
- Flying start does not work at lower values than 250 rpm.

---

451 Speed PID feedforward factor (feedforward fact)

Value:

0 - 500 % ★ 100 %

Function:

This parameter is only active if in parameter 100 *Configuration* the selection made is *Speed regulation, closed loop*. The FF function sends a larger or smaller part of the reference signal outside the PID controller in such a way that the PID controller only has an influence on part of the control signal. Any change to the set point will thus have a direct effect on the motor speed. The FF factor provides high dynamism when changing the set point and less overswing.

Description of choice:

The required % value can be selected in the interval f_{MIN} - f_{MAX}. Values over 100 % are used if the set point variations are only small.

---

452 Controller range (pid contr. range)

Value:

0 - 200 % ★ 10 %

Function:

This parameter is only active if in parameter 100 *Configuration* the selection made is *Speed regulation, closed loop*.
The controller range (bandwidth) limits the output from the PID controller as a % of motor frequency $f_{M,N}$.

Description of choice:

The required % value can be selected for motor frequency $f_{M,N}$. If the controller range is reduced the speed variations will be less during initial tuning.

---

455 Frequency range monitor (MON. FREQ. RANGE)

Value:

Disable [0]
★ Enable [1]

Function:

This parameter is used if warning 33 *Out of frequency range* must be turned off in the display in process control closed loop. This parameter does not affect the extended status word.

Description of choice:

Select *Enable* [1] to enable the readout in the display if warning 33 *Out of frequency range* occurs. Select *Disable* [0] to disable the readout in the display if warning 33 *ut of frequency range* occurs.

---

456 Brake Voltage Reduce (BRAKE VOL REDUCE)

Value:

0 - 25 V if 200V device ★ 0
0 - 50 V if 400V device ★ 0

Function:

The user sets the voltage by which the level for resistor braking is reduced. It is only active when resistor in parameter 400 is selected.

Description of choice:

The greater the reduction value, the faster the reaction to a generator overload. Should only be used if there

Programming

★ = factory setting, () = display text, [] = value for use in communication via serial communication port

are problems with overvoltage in the intermediate circuit.

457 Phase loss function (PHASE LOSS FUNCT)

Value:

★ Trip (TRIP)	[0]
Autoderate & warning (AUTODERATE & WARNING)	[1]
Warning (WARNING)	[2]

Function:

Select the function which is to be activated if the mains imbalance becomes too high or if a phase is missing.

Description of choice:

At *Trip* [0] the frequency converter will stop the motor within a few seconds (depending on drive size).
If *Autoderate & warning* [1] is selected, the drive will export a warning and reduce the output current to 50 % of $I_{VLT,N}$ to maintain operation.
At *Warning* [2] only a warning will be exported when a mains failure occurs, but in severe cases, other extreme conditions might result in a trip.

NB!
If *Warning* has been selected, the life expectancy of the drive will be reduced when the mains failure persists.

461 Feedback conversion (FEEDBAC CONV.)

Value:

★ Linear (LINEAR)	[0]
Square root (SQUARE ROOT)	[1]

Function:

In this parameter, a function is selected which converts a connected feedback signal from the process to a feedback value that equals the square root of the connected signal. This is used, e.g. where regulation of a flow (volume) is required on the basis of pressure as feedback signal (flow = constant x $\sqrt{pressure}$). This conversion makes it possible to set the reference in such a way that there is a linear connection between the reference and the flow required.

Description of choice:

If *Linear* [0] is selected, the feedback signal and the feedback value will be proportional. If *Square root* [1] is selected, the frequency converter translates the feedback signal to a squared feedback value.

NB!
Parameter groups 500 *Serial communication* and 600 *Service functions* are not included in this manual. Please contact Danfoss and ask for the VLT 2800 Design Guide.

★ = factory setting, () = display text, [] = value for use in communication via serial communication port

■ Enhanced Sleep Mode

The enhanced sleep mode has been developed to work under all conditions and to overcome problems when using pumps with flat pump curves or when suction pressure varies. Enhanced sleep mode provides excellent control for shutting down the pump at low flow, thus saving energy.

If operating with constant pressure control in the SYSTEM, for instance a drop in the suction pressure will lead to an increase in frequency to maintain pressure. Consequently there is a situation, where the frequency will vary independent of the flow. This can lead to inappropriate activation of sleep mode or wake-up of the frequency converter.

Flat pump curves leads to a situation where there will be little or no change in frequency in response to flow variation. Consequently, the frequency converter might not reach the sleep frequency when setting it at a low value.

Enhanced sleep mode is based on power/frequency monitoring and works in closed loop only. Stop due to the enhanced sleep mode function is initiated under the following conditions:

- Power consumption is below the no/low flow power curve and stays there for a certain time (parameter 462 *Enhanced sleep mode timer*) **or**
- The pressure feedback is above the reference when running at minimum speed and stays there for a certain time (parameter 462 *Enhanced sleep mode timer*).

If the feedback pressure falls below the wakeup pressure (Parameter 464 *Wakeup pressure*), the frequency converter restarts the motor.

■ Dry Run Detection

For most pumps, especially submersible bore-hole pumps, it must be assured that the pump is stopped in case of dry run. This is assured by the Dry run detection feature.

How Does It Work?

Dry run detection is based on power/frequency monitoring and works in both closed and open loop.

Stop (trip) due to dry run is initiated under following conditions:

Closed loop:

- The frequency converter is running at maximum frequency (parameter 202 *Output frequency high limit*, f_{MAX}) **and**
- Feedback is below minimum reference (parameter 204 *Minimum reference*, $Ref._{MIN}$) **and**
- Power consumption is below the no/low flow power curve for a certain time (parameter 470 *Dry run time out*)

Open loop:

- Whenever the power consumption is below the no/low flow power curve for a certain time (parameter 470 *Dry run time out*) the frequency converter will trip.

The frequency converter can be set up for either manual or automatic restart after stop (parameters 405 *Reset function* and 406 *Automatic restart time*).

- Enhanced Sleep Mode and Dry Run Detection can be enabled and disabled independently. This is done in parameter 462 *Enhanced sleep mode timer* and parameter 470 *Dry run time out*.

Centrifugal pumps with radial impellers show a clear one-to-one relation between power consumption and flow, which is utilized to detect a no or low flow situation.

It is only necessary to enter two sets of values for power and frequency (min and max) at no or low flow. The frequency converter then automatically calculates all data in-between those two sets of values and generates the no/low flow power curve.

If the power consumption falls below the power curve, the frequency converter enters Sleep-mode or trips due to dry run, depending on the configuration.

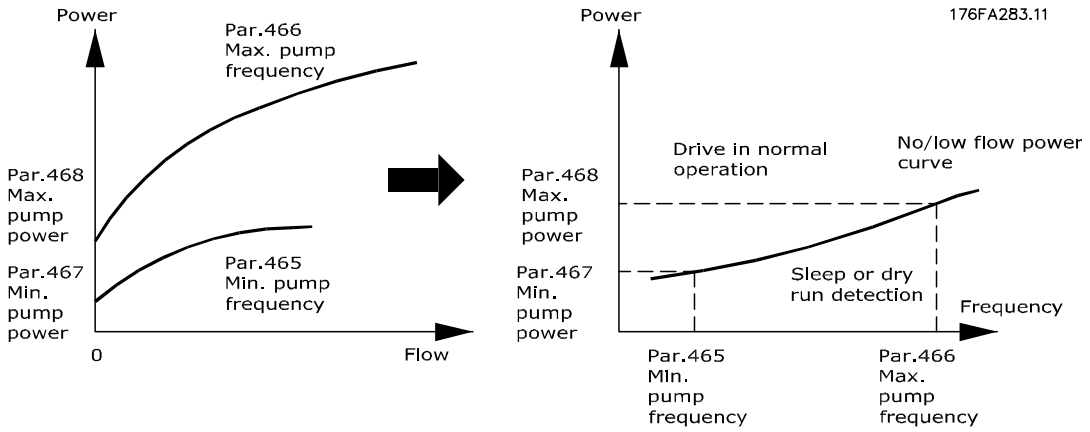

- Dry run protection. Shuts down at no or low flow and protects the motor and pump from overheating.
- Improved energy savings with Enhanced sleep mode.
- Minimized risk of bacterial growth in drinking water because of insufficient motor cooling.
- Easy commissioning.

Only centrifugal pumps with radial impeller show a clear one to one relationship between flow and power. Consequently proper functionality of the Enhanced Sleep Mode and Dry Run Detection is only given for this type of pump.

462 Enhanced Sleep Mode Timer
(ESL timer)

Value:

Value 0 – 9999 sec. ★ 0 = OFF

Function:

The timer prevents cycling between Sleep mode and normal operation. If for instance the power consumption falls below the no/low flow power curve the frequency converter will change mode when the timer expires.

Description of choice:

In case of cycling, set the timer to an appropriate value that limits the number of cycles.
The value 0 disables Enhanced sleep mode.
Note: In parameter 463 *Boost set point* it is possible to set up the frequency converter to provide a pressure boost before the pump is stopped.

463 Boost setpoint
(BOOST SETPOINT)

Value:

1 - 200 % ★ 100 % of setpoint

Function:

This function can only be used if *Closed loop* has been selected in parameter 100.
In systems with constant pressure regulation, it is advantageous to increase the pressure in the system before the frequency converter stops the motor. This extends the time during which the frequency converter stops the motor and helps to avoid frequent starting and stopping of the motor, e.g. in the case of leaks in the water supply system.

There is a fixed boost time-out on 30 sec. in case the boost setpoint cannot be reached.

Description of choice:

Set the required *Boost setpoint* as a percentage of the resulting reference under normal operation. 100% corresponds to the reference without boost (supplement).

★ = factory setting, () = display text, [] = value for use in communication via serial communication port

464 Wakeup Pressure
(Wakeup Pressure)

Value:

Par. 204 Ref_{MIN} – par. 215 - 218 Setpoint ★ 0

Function:

When in Sleep mode the frequency converter will wake up when the pressure is below the Wakeup pressure for the time set in parameter 462 *Enhanced sleep mode timer*.

Description of choice:

Set an appropriate value for the system. The unit is set in parameter 416.

465 Minimum pump frequency
(Pump min. freq.)

Value:

Value par. 201 f_{MIN} – par. 202 f_{MAX} (Hz) ★ 20

Function:

This parameter is linked to parameter 467 *Minimum Power* and is used for no/low flow power curve.

Description of choice:

Enter a value equal or close to the desired minimum frequency set in parameter 201 *Output frequency low limit,* f_{MIN} . Please note, that the extension of the no/low flow power curve is limited by parameters 201 and 202 and not by parameters 465 and 466.

466 Maximum Pump Frequency
(Pump max. freq)

Value:

Value par. 201 f_{MIN} - par. 202 f_{MAX} (Hz) ★ 50

Function:

This parameter is linked to parameter 468 *Maximum pump power* and is used for the no/low flow power curve.

Description of choice:

Enter a value equal or close to the desired maximum frequency set in parameter 202 *Output frequency high limit,* f_{MAX} .

467 Minimum Pump Power
(Min. pump power)

Value:

0 – 500.000 W ★ 0

Function:

The associated power consumption at the frequency entered in parameter 465 *Minimum pump frequency*.

Description of choice:

Enter the no/low flow power reading at minimum pump frequency entered in parameter 465.

Depending on pump size or curve select W or kW in par. 009 index [32] and [8] for fine tuning.

468 Maximum Pump Power
(Max. pump power)

Value:

0 – 500.000 W ★ 0

Function:

The associated power consumption at the frequency entered in parameter 466 *Minimum pump frequency*.

Description of choice:

Enter the no/low flow power reading at maximum pump frequency entered in parameter 466.

Depending on pump size or curve select W or kW in par. 009 index [32] and [8] for fine tuning.

469 No Flow Power Compensation
(NF power comp)

Value:

0.01 - 2 ★ 1.2

Function:

This function is used for an off-set of the no/low flow power curve, which can be used as a safety factor or for fine tuning of the system.

Description of choice:

Description The factor is multiplied to the power values. E.g. 1.2 will increase the power value with 1.2 over the whole frequency range.

★ = factory setting, () = display text, [] = value for use in communication via serial communication port

470	Dry Run Time Out
	(DRY RUN TIME OUT)

Value:

5-30 sec. ★ 31 = OFF

Function:

If the power is below the no/low flow power curve, running at max speed for the time set in this parameter, the frequency converter will trip on Alarm 75: Dry run. In open loop operation the maximum speed does not necessarily need to be reached before tripping.

Description of choice:

Set the value to obtain the desired delay before tripping. Manual or automatic restart can be programmed in parameter 405 *Reset function* and 406 *automatic restart time*.

The value 30 disables Dry run detection.

471	Dry Run Interlock Timer
	(Dry run int time)

Value:

0.5-60 min. ★ 30 min.

Function:

This timer determines when a trip due to dry run can be automatically reset. When the timer expires, the automatic reset of the trip can automatically restart the frequency converter again.

Description of choice:

Parameter 406 *Automatic restart time* still determines how frequent an attempt to reset a trip will be performed. If for instance parameter 406 *Automatic restart time* is set to 10 sec. and parameter 405 *Reset function* is set to Automatic Reset x10 the frequency converter will attempt to reset the trip 10 times within 100 seconds. If parameter 471 is set to 30 min. the frequency converter will consequently not be able to perform automatic reset of dry run trip and will need a manual reset.

484	Initial ramp
	(INITIAL RAMP)

Value:

OFF/000.1s - 360.0 s ★ OFF

Function:

Allows the motor/equipment to be brought up to minimum speed (frequency) at a rate different than the normal Ramp-Up rate (param. 207).

Description of choice:

As an example, vertical pumps and other equipment often have a requirement to not operate below a minimum speed any longer than necessary. Damage and excessive wear can occur when operating below minimum speed (frequency) for too long a period of time. The Initial Ramp is used to quickly accelerate the motor/equipment to minimum speed at which point, the normal Ramp-Up rate (parameter 207) is made active. The range of adjustment of the Initial Ramp is from 000.1 second to 360.0 seconds; adjustable in 0.1 second increments. If this parameter is set to 000.0, OFF is displayed in this parameter, the Initial Ramp is not active, and the normal Ramp-Up is active.

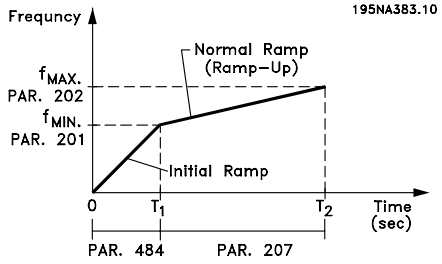

■ Fill Mode

Fill Mode eliminates the occurrence of water hammer associated with the rapid exhausting of air from piping systems (such as Irrigation systems).

The frequency converter, set for Closed Loop operation uses an adjustable Fill Rate, a "Filled Pressure" setpoint, an operating pressure setpoint, and a pressure feedback.

Fill Mode is available when:

- The VLT 2800 drive is in **Closed Loop** mode (parameter 100).
- Parameter 485 is **not 0**
- Parameter 437 is set to **NORMAL**

After a start command, Fill Mode operation begins when the frequency converter reaches minimum frequency - set in parameter 201.

★ = factory setting, () = display text, [] = value for use in communication via serial communication port

The "Filled" Setpoint - parameter 486- is actually a setpoint limit. When minimum speed is reached, the pressure feedback is looked at, and the frequency converter begins to ramp to the "Filled" pressure setpoint at the rate established by Fill Rate parameter 485.

The Fill Rate - parameter 485- is dimensioned in Units/Second. The Units will be the units selected in parameter 416.

When the pressure feedback equals the "Filled" Setpoint, the control transitions to the operating setpoint (Setpoint 1-4, param. 215-218) and continues operation in standard (normal) "closed loop" mode.

The value to use for the "Filled" Setpoint parameter 486, can be determined by:

1. Use the DISPLAY MODE key on the LCP to display **FEEDBACK 1**.
   IMPORTANT! Be sure that you have selected the UNITS in parameter 416 before this step.
2. Operate the VLT 2800 in **HAND** mode and slowly advance the speed to fill the pipe while being careful not to create a water hammer.
3. An observer at the end of the pipe must be able to report when the pipe is filled.
4. At that instant, stop the motor, and observe the value of pressure feedback (have the LCP display set to observe the feedback before starting).
5. The value of feedback in step 4) is the value to use in parameter 486 - "Filled" Setpoint.

The value to set in parameter 485- Fill Rate can be supplied by the system engineer from proper calculation or from experience, or it can be determined experimentally by performing numerous fill mode sequences and either increasing or decreasing the value of this parameter to obtain the fastest fill without causing a water hammer.

The **Fill Mode** is also beneficial when bringing the motor to a stop as it prevents sudden changes in pressure and flow which could also cause a water hammer.

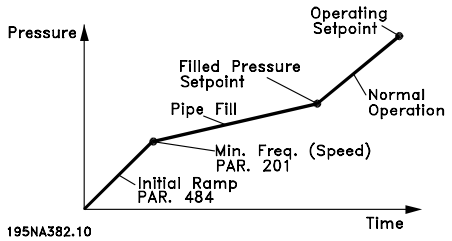

485 Fill Rate (FILL RATE)

Value:

OFF/000000.001 - 999999.999 (units/s) - ★ OFF

Function:

Establishes the rate at which the pipe is filled.

Description of choice:

The dimension of this parameter is Units/Second. The Units will be the value selected in parameter 416. As an example, the Units could be Bar, or MPa, or PSI, etc. If Bar is the selected unit in parameter 416, then the number set in this parameter (485) would be dimensioned as Bar/Second. Changes to this parameter can be made in steps of .001 units.

486 Filled Setpoint (FILLED SETPOINT)

Value:

Param. 414 - Param. 205 - ★ Param. 414

Function:

The value set in this parameter corresponds to the pressure that exists at the pressure sensor when the pipe is filled.

Description of choice:

The Units of this parameter correspond to the units selected in Parameter 416. The minimum value of this parameter is Fb_{min} (param. 414). The maximum value for this parameter is Ref_{max} (param. 205). The setpoint can be changed in .01 steps.

★ = factory setting, () = display text, [] = value for use in communication via serial communication port

Mechanical dimensions

The drawings below describe the mechanical dimensions. All dimensions are in mm.

NB!
Please note that all filter options must be vertically mounted.

VLT 2803-2815 200-240 Volt
VLT 2805-2815 380-480 Volt

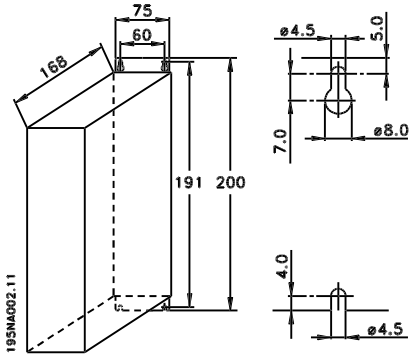

VLT 2822 200-240 Volt
VLT 2822-2840 380-480 Volt

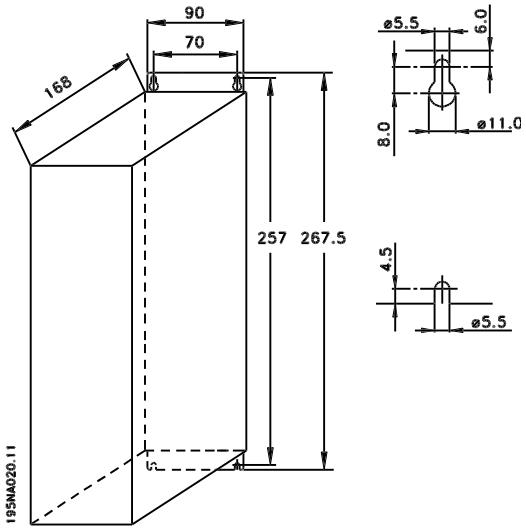

VLT 2822 220 - 240 V, PD2
VLT 2840 200-240 Volt
VLT 2855-2875 380-480 Volt

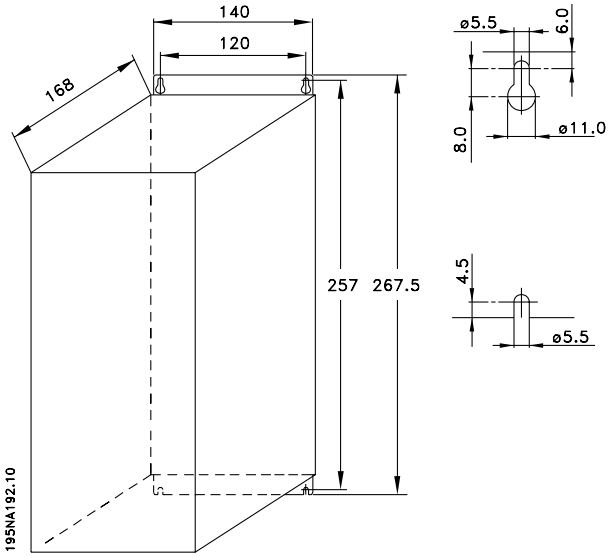

VLT 2840 220-240 V, PD2
VLT 2880-82 380-480V

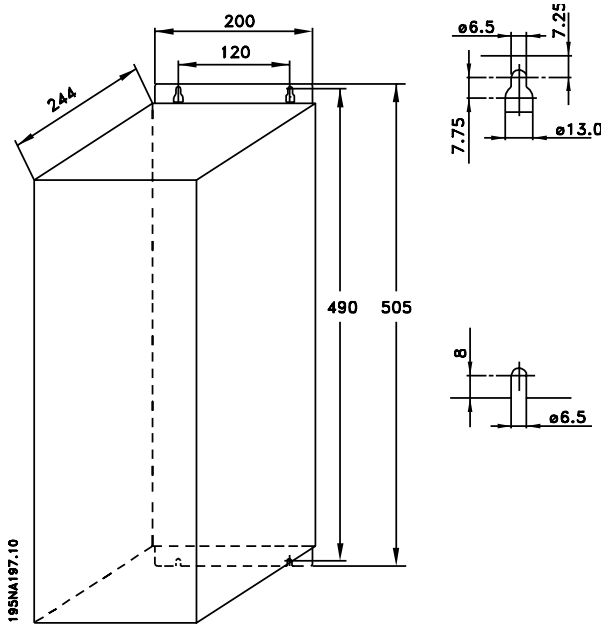

Motor coils (195N3110)

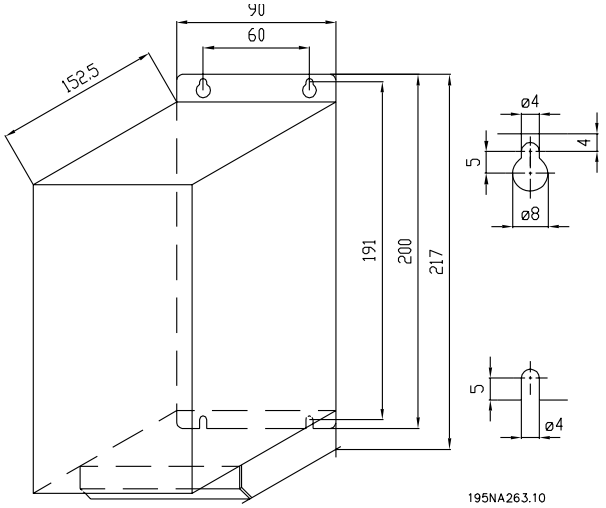

RFI 1B filter (195N3103)

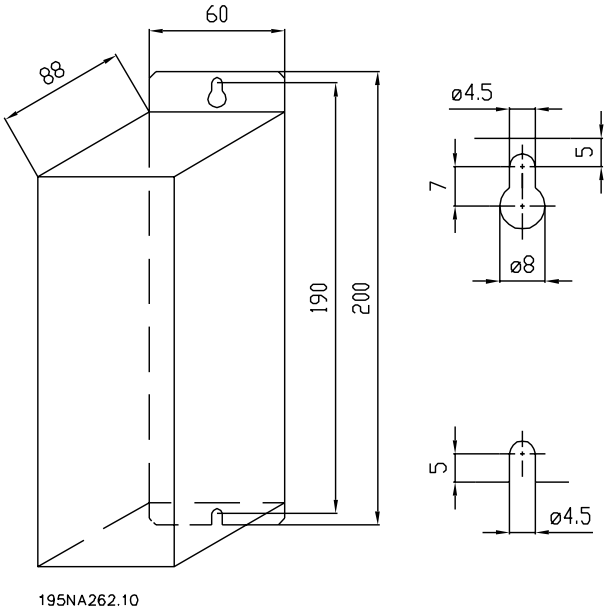

Terminal cover

The drawing below gives the dimensions for NEMA 1 terminal covers for VLT 2803-2875.
Dimension 'a' depends on the unit type.

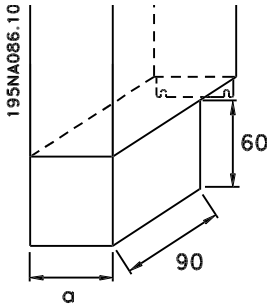

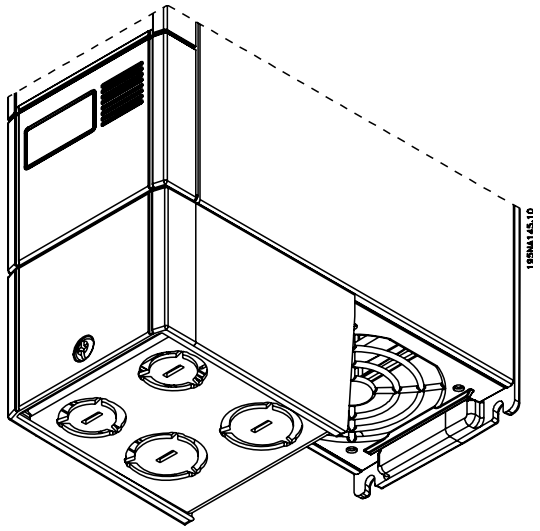

IP 21 solution

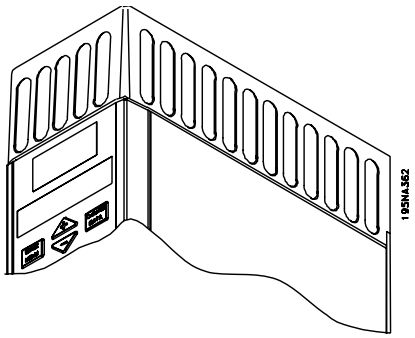

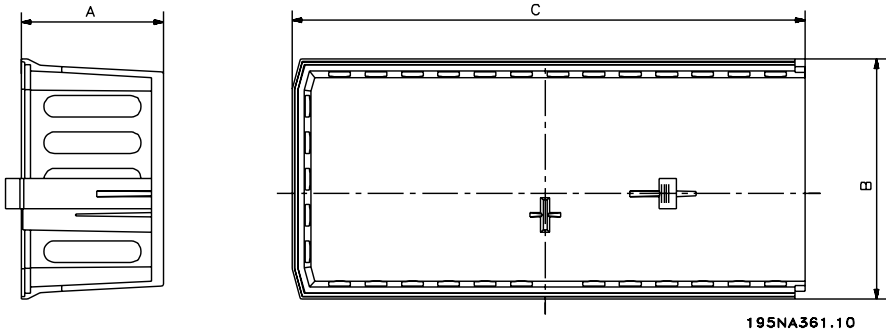

Dimensions

Type	Code number	A	B	C
VLT 2803-2815 200-240 V, VLT 2805-2815 380-480 V	195N2118	47	80	170
VLT 2822 200-240 V, VLT 2822-2840 380-480 V	195N2119	47	95	170
VLT 2840 200-240 V, VLT 2822 PD2, TR1 2855-2875 380-480 V	195N2120	47	145	170
TR1 2880-2882 380-480 V, VLT 2840 PD2	195N2126	47	205	245

■ **EMC filter for long motor cables**

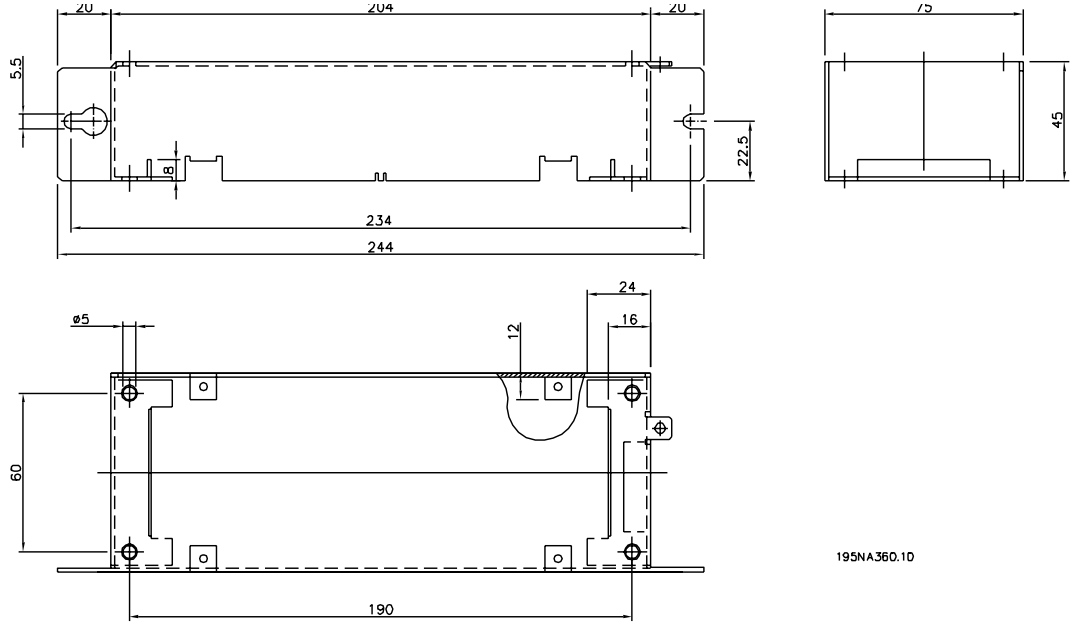

192H4719

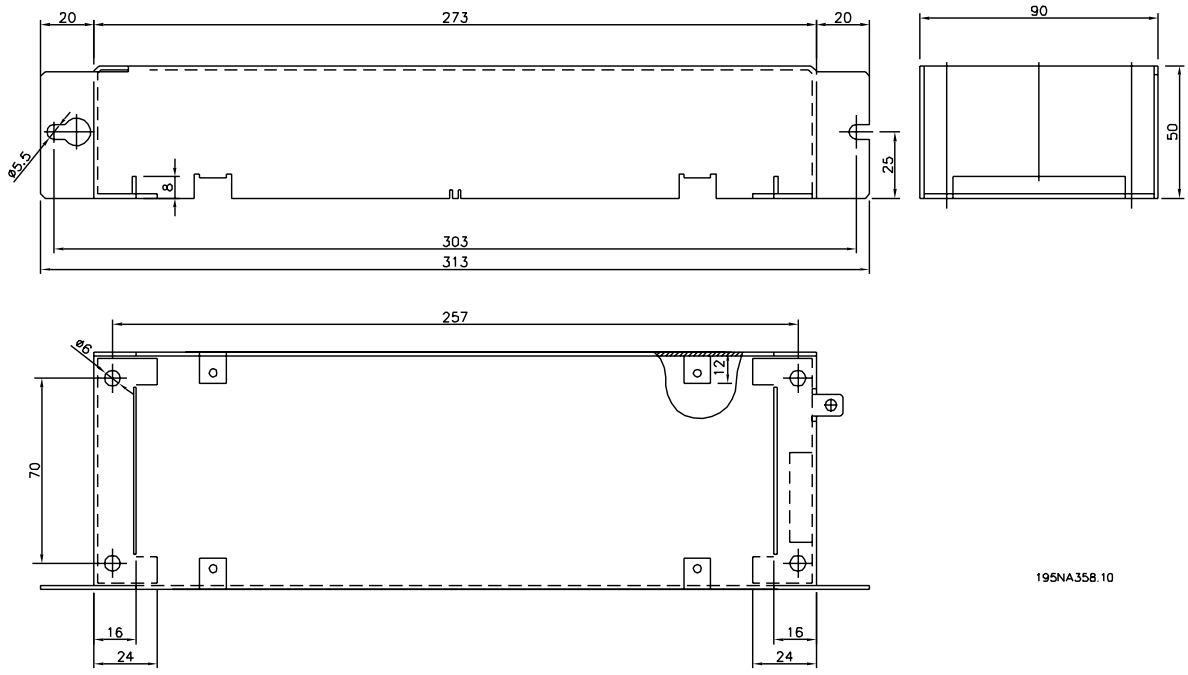

192H4720

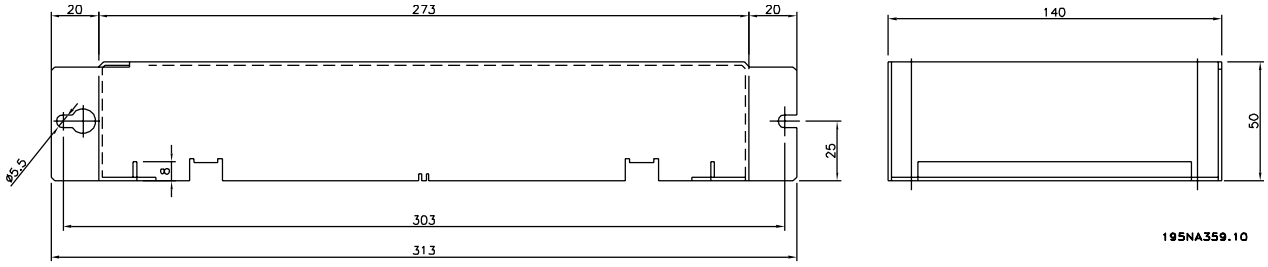
20
273
20
140
Ø5.5
8
25
303
313
50
195NA359.10

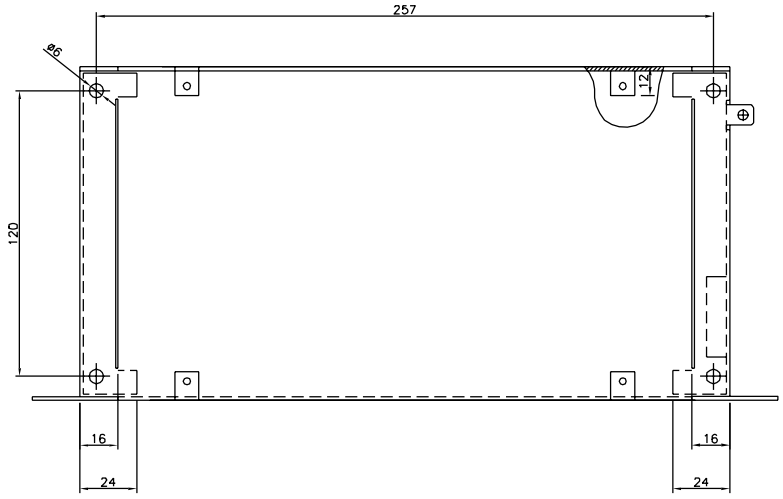
257
Ø6
12
120
16
24
16
24

192H4893

Mechanical installation

Please pay attention to the requirements that apply to installation.

The frequency converter is cooled by means of air circulation. For the unit to be able to release its cooling air, the minimum free distance above and below the unit must be minimum 100 mm . To protect the unit from overheating, it must be ensured that the ambient temperature does not rise above the max. temperature stated for the frequency converter and that the 24-hour average temperature is not exceeded. The max. temperature and 24-hour average can be seen in *General technical data*. If the ambient temperature is in the range of 45 °C - 55 °C, derating of the frequency converter is to be carried out. See *Derating for ambient temperature*. Please note that the service life of the frequency converter will be reduced if no allowance is made for the derating for ambient temperature.

Integration

All units with enclosure IP 20 must be integrated in cabinets and panels. IP 20 is not suitable for remote mounting. In some countries, e.g. in the USA, units with enclosure NEMA 1 are approved for remote mounting.

Spacing for mechanical installation

All units require a minimum of 100 mm air between other components and vents of the enclosure.

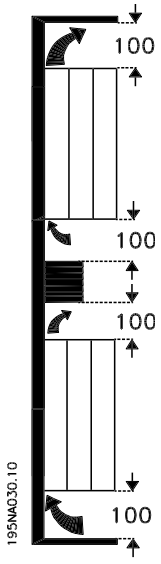

Side-by-side

All VLT 2800 units can be installed side-by-side and in any position, as the units do not require ventilation on the side.

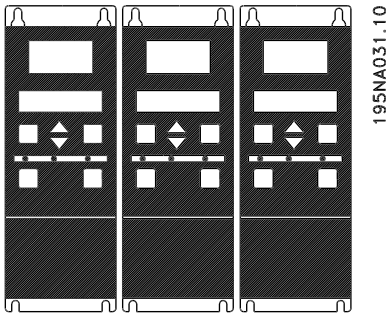

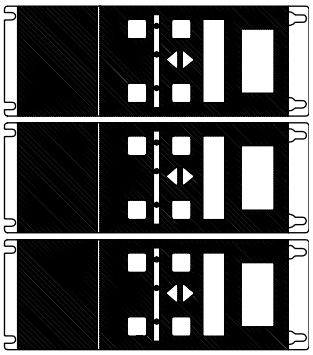

NB!
With the IP 21 solution all units require a minimum of 100 mm air on each side. This means that side-by-side mounting is not allowed.

General information about electrical installation

High voltage warning



The voltage of the frequency converter is dangerous whenever the equipment is connected to mains. Incorrect installation of the motor or frequency converter may cause damage to the equipment, serious injury or death. Comply with the instructions in this manual, as well as national and local rules and safety regulations.
Touching the electrical parts may be fatal - even after the equipment has been disconnected from mains: Wait at least 4 minutes for current dissipate.



NB!
It is the responsibility of the user or installer to ensure correct earthing and protection in accordance with national and local standards.

Earthing

Comply with the following at installation:

- Safety earthing: The drive has a high leakage current and must be earthed properly for safety. Follow all local safety regulations.
- High frequency earthing: Keep earthing connections as short as possible.

Connect all earthing SYSTEMs to ensure the lowest possible conductor impedance. The lowest possible conductor impedance is achieved by keeping the conductor as short as possible and by grounding with the greatest possible surface area. If multiple drives are installed in a cabinet, the cabinet backplate, which must be made of metal, should be used as a joint earth reference plate. The drives must be fitted to the backplate at the lowest possible impedance.

To achieve low impedance, connect the drive to the backplate with the drive fastening bolts. Remove all paint from the contact points.

Extra protection

RCD relays, multiple protective earthing or earthing can be used as extra protection, provided that local safety regulations are complied with. In the case of an earth fault, a DC content may develop in the faulty current. Never use an RCD (ELCB relay), type A, as it is not suitable for DC faulty currents. If RCD relays are used, local regulations must be complied with.If RCD relays are used, they must be:

- Suitable for protecting equipment with a DC content in the faulty current (3-phase bridge rectifier).
- Suitable for a pulse-shaped, brief discharge on power-up.
- Suitable for a high leakage current.

N must be connected before L1 for single phase 200 V reduced leakage current units (type code R4).

High voltage test

A high voltage test can be performed by short-circuiting terminals U, V, W, L1, L2 and L3, and applying max. 2160 V DC in 1 sec. between this short-circuit and terminal 95.



Do not perform a high voltage test between the control terminals and the chassis, because the voltage potential of the control card cannot exceed approx. 100 volt with respect to chassis due to a voltage limiting circuitry.
The terminals are protected against direct hazardous access through barriers.

EMC-correct electrical installation

General points to be observed to ensure EMC-correct electrical installation.

- Use only screened/armoured motor cables and screened/armoured control cables.
- Connect the screen to earth at both ends.
- Avoid installation with twisted screen ends (pigtails), since this ruins the screening effect at high frequencies. Use cable clamps instead.
- It is important to ensure good electrical contact from the installation plate through the installation screws to the metal cabinet of the frequency converter.
- Use starwashers and galvanically conductive installation plates.
- Do not use unscreened/unarmoured motor cables in the installation cabinets.

The illustration below shows EMC-correct electrical installation, in which the frequency converter has been fitted in an installation cabinet and connected to a PLC.

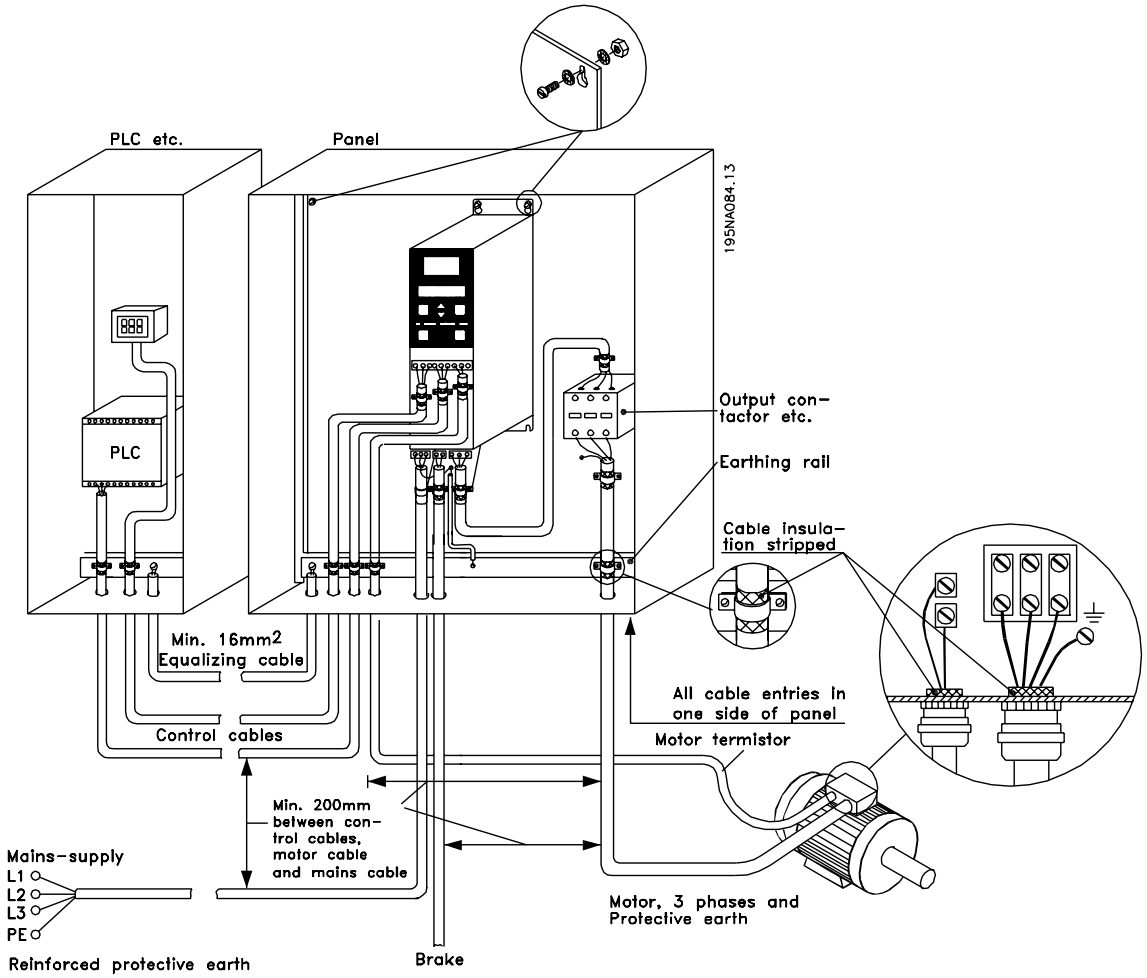

Electrical installation

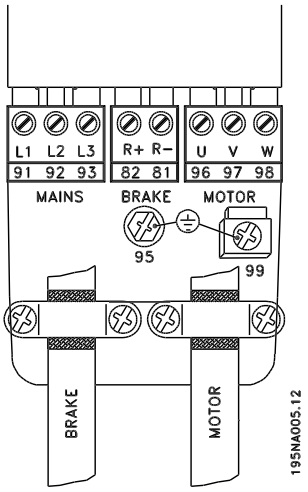

See also the section Brake Connection.

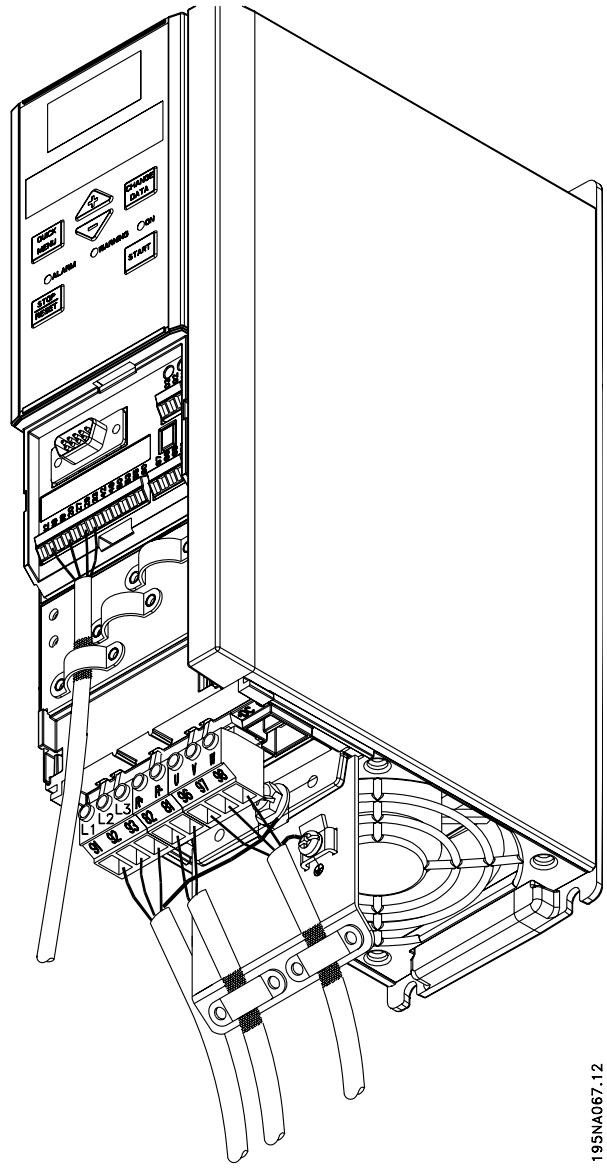

VLT 2822 200-240 V, 2822-2840 380-480 V

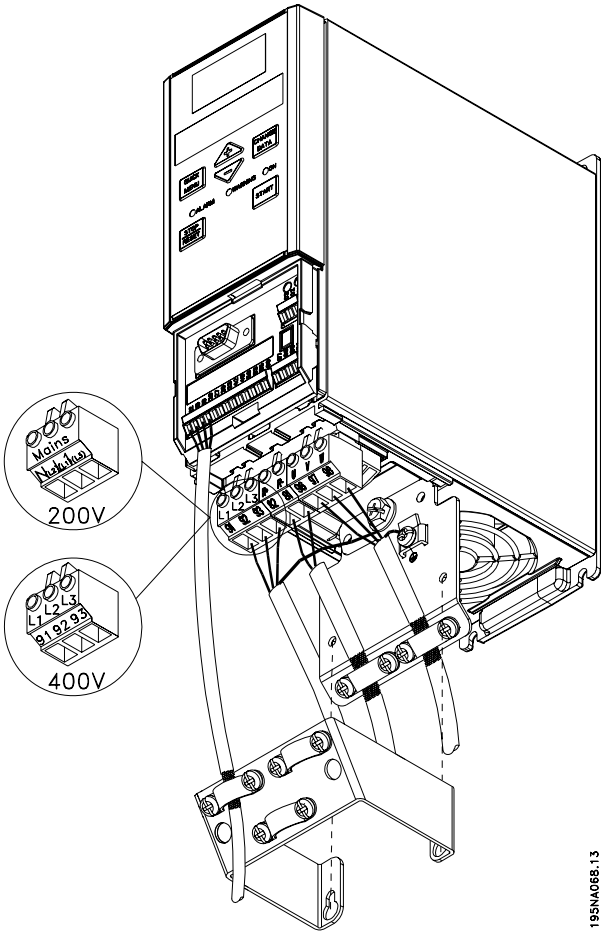

VLT 2803-2815 200-240 V, 2805-2815 380-480 V

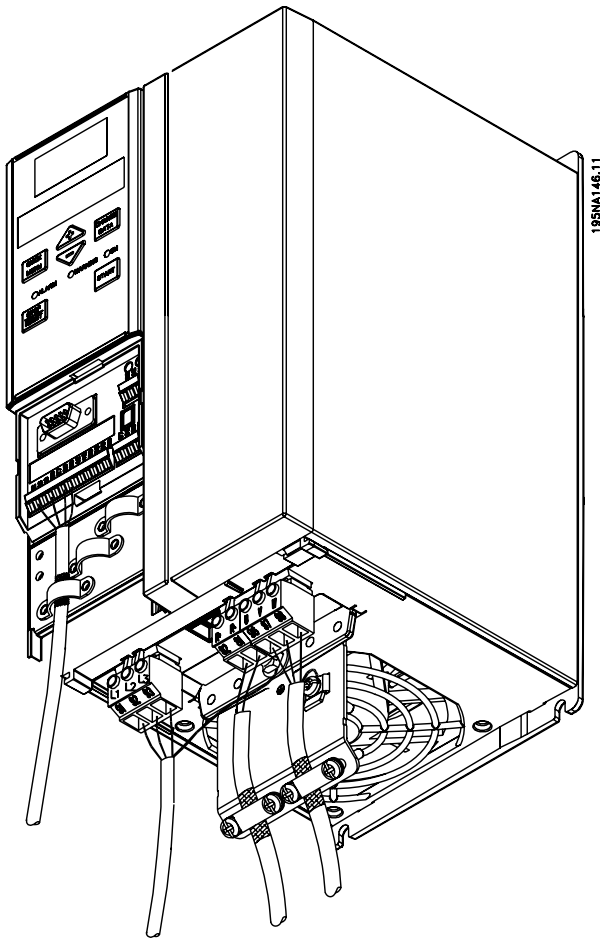

VLT 2840 200-240 V, VLT 2822 PD2, 2855-2875 380-480 V

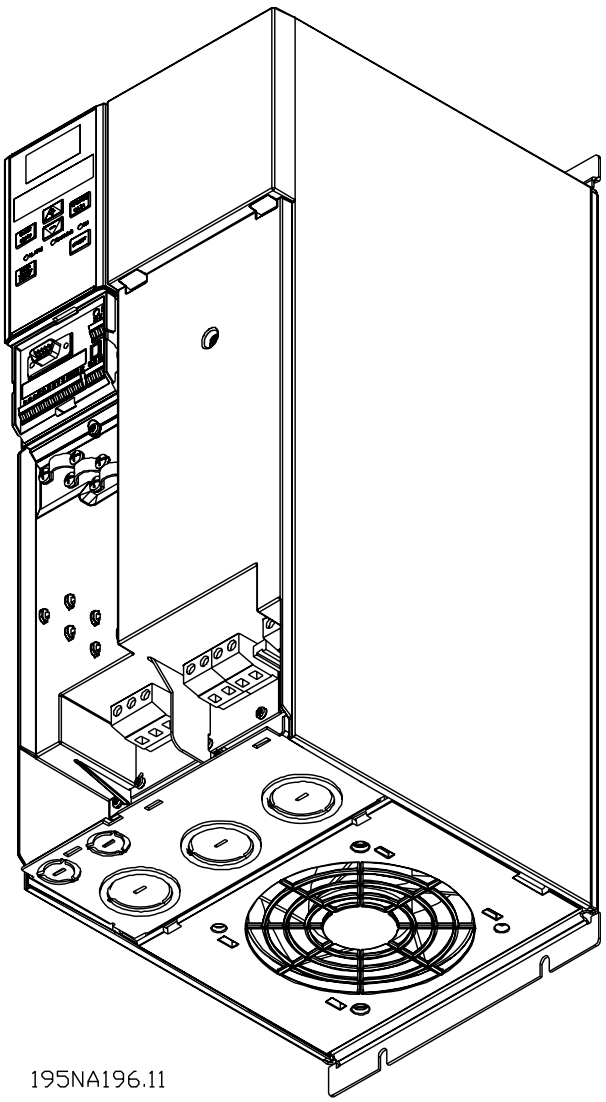

VLT 2880-2882 380-480 V, VLT 2840 PD2

Please note that the units will be supplied with two bottom plates; one for metric glands and one for conduits.

■ Safety clamp

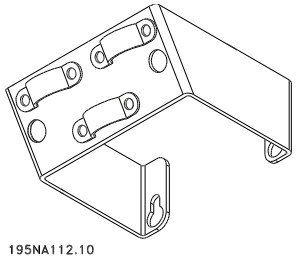

If the galvanic isolation (PELV) between control terminals and high-voltage terminals is to be maintained, the accompanying safety clamp must be fitted to VLT 2803-2815, 200-240 V, and VLT 2805-2815, 380-480 V.

■ Pre-fuses

For all unit types, external pre-fuses must be fitted in the mains supply to the frequency converter. For UL/cUL applications with a mains voltage of 200-240 Volt, use pre-fuses type Bussmann KTN-R (200-240 Volt) or Ferraz Shawmut type ATMR (max. 30A). For UL/cUL applications with a mains voltage of 380-480 Volt, use pre-fuses type Bussmann KTS-R (380-480 Volt).

Prefuses for UL application /cUL

Alternative fuses 380-500 V drives										
VLT 2800	**Bussmann E52273**	**Bussmann E4273**	**Bussmann E4273**	**Bussmann E4273**	**Bussmann E4273**	**Bussmann E4273**	**SIBA E180276**	**Little Fuse E81895**	**Ferraz-Shawmut E163267/ E2137**	**Ferraz-Shawmut E163267/ E2137**
	RK1/JDDZ	J/JDDZ	T/JDDZ	CC/JDDZ	CC/JDDZ	CC/JDDZ	RK1/JDDZ	RK1/JDDZ	CC/JDDZ	RK1/JDDZ
2805-2820	KTS-R20	JKS-20	JJS-20	FNQ-R-20	KTK-R-20	LP-CC-20	5017906-020	KLS-R20	ATM-R25	A6K-20R
2855-2875	KTS-R25	JKS-25	JJS-25				5017906-025	KLS-R25	ATM-R20	A6K-25R
2880-2882	KTS-R50	JKS-50	JJS-50				5014006-050	KLS-R50	-	A6K-50R
Alternative Fuses 200-240 V drives										
VLT 2800	**Bussmann E52273**	**Bussmann E4273**	**Bussmann E4273**				**SIBA E180276**	**Little Fuse E81895**	**Ferraz-Shawmut E163267/ E2137**	**Ferraz-Shawmut E163267/ E2137**
	RK1/JDDZ	J/JDDZ	T/JDDZ				RK1/JDDZ	RK1/JDDZ	CC/JDDZ	RK1/JDDZ
2803-2822	KTN-R20	JKS-20	JJN-20				5017906-020	KLS-R20	ATM-R25	A6K-20R
2840	KTN-R25	JKS-25	JJN-25				5017906-025	KLS-R25	ATM-R20	A6K-25R

■ Mains connection

Please note that at 1 x 220-240 Volt the neutral wire must be attached to terminal N (L2) and the phase wire must be connected to terminal L1 (L1).

No.	N(L2)	L1(L1)	(L3)		Mains voltage 1 x 220-240 V
	N	L1			
No.	95				Earth connection

No.	N(L2)	L1(L1)	(L3)		Mains voltage 3 x 220-240 V
	L2	L1	L3		
No.	95				Earth connection

No.	91	92	93	Mains voltage 3 x 380-480 V
	L1	L2	L3	
No.	95			Earth connection

NB!
Please check that the mains voltage fits the mains voltage of the frequency converter, which can be seen from the nameplate.

400-Volt units with RFI-filters may not be connected to mains supplies in which the voltage between phase and earth is more than 300 Volts. Please note that for the IT mains and the delta earth the mains voltage can exceed 300 Volts between phase and earth. Units with type code R5 can be connected to mains supplies with up to 400 V between phase and earth.

See *Technical data* for correct dimensioning of cable cross-section. See also the section entitled *Galvanic isolation* for further details.

Motor connection

Connect the motor to terminals 96, 97, 98. Connect earth to terminal 99.

No.	96 97 98 U V W	Motor voltage 0-100% of mains voltage. 3 wires of motor
	U1 V1 W1 W2 U2 V2	6 wires out of motor, Delta connected
	U1 V1 W1	6 wires out of motor, Star connected U2, V2, W2 to be interconnected separely (optional terminal block)
No.	PE	Earth connection

See *Technical data* for correct dimensioning of cable cross-section.

All types of three-phase asynchronous standard motors can be connected to a frequency converter. Normally, small motors are star-connected (230/400 V, Δ/ Y). Large motors are delta-connected (400/690 V, Δ/ Y). The correct connection mode and voltage can be read from the motor nameplate.

NB!
In motors without phase insulation paper, an LC filter should be fitted on the output of the frequency converter.

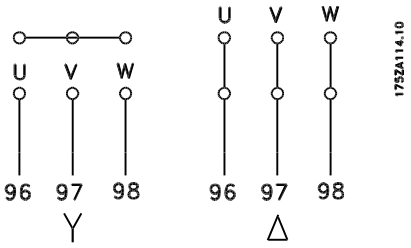

RFI switch

Mains supply isolated from earth:
If the frequency converter is supplied from an isolated mains source (IT mains) or TT/TN-S mains with grounded leg, the RFI switch is recommended to be turned off (OFF). For further reference, see IEC 364-3. In case optimum EMC performance is needed, parallel motors are connected or the motor cable length is above 25 m, it is recommended to set the switch in ON position.
In OFF position, the internal RFI capacities (filter capacitors) between the chassis and the intermediate circuit are cut off to avoid damage to the intermediate circuit and to reduce the earth capacity currents (according to IEC 61800-3).
Please also refer to the application note *VLT on IT mains*, MN.90.CX.02. It is important to use isolation monitors that are capable for use together with power electronics (IEC 61557-8).

NB!
The RFI switch is not to be operated with mains connected to the unit. Check that the mains supply has been disconnected before operating the RFI switch.

NB!
The RFI switch disconnects the capacitors galvanically from ground.

The switch Mk9, placed next to terminal 96, should be removed to disconnect the RFI-filter.
The RFI switch is only available on VLT 2880-2882.

Direction of motor rotation

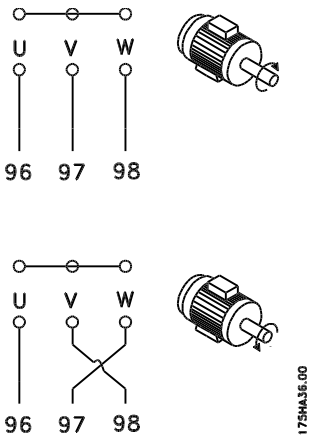

The factory setting is for clockwise rotation with the frequency converter transformer output connected as follows:

Terminal 96 connected to U-phase.

Terminal 97 connected to V-phase.

Terminal 98 connected to W-phase.

The direction of rotation can be changed by switching two phases on the motor terminals.

■ Parallel connection of motors

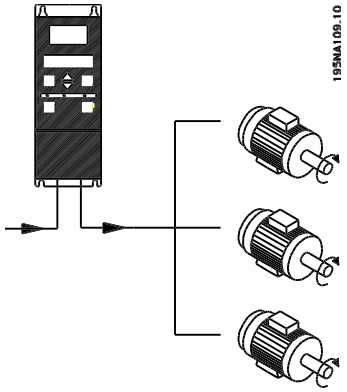

The frequency converter is able to control several motors connected in parallel. If the motors are to have different rpm values, use motors with different rated rpm values. Motor rpm is changed simultaneously, which means that the ratio between the rated rpm values is maintained across the range. The total current consumption of the motors is not to exceed the maximum rated output current I_{INV} for the frequency converter.

Problems may arise at the start and at low rpm values if the motor sizes are widely different. This is because the small motors' relatively high ohmic resistance in the stator calls for a higher voltage at the start and at low rpm values.

In systems with motors connected in parallel, the electronic thermal relay (ETR) of the frequency converter cannot be used as motor protection for the individual motor. For this reason further motor protection must be used, e.g. thermistors in each motor or an individual thermal relay. (Circuit breakers are not suitable as protection).

NB!
Parameter 107 *Automatic motor adaption, AMT* cannot be used when motors are connected in parallel. Parameter 101 *Torque characteristic* must be set to *Special motor characteristics* [8] when motors are connected in parallel.

■ Motor cables

See Technical data for correct dimensioning of motor cable cross-section and length. Always comply with national and local regulations on cable cross-section.

NB!
If an unscreened/unarmoured cable is used, some EMC requirements are not complied with, see *EMC test results* in the Design Guide.

If the EMC specifications regarding emission are to be complied with, the motor cable must be screened/armoured, unless otherwise stated for the RFI filter in question. It is important to keep the motor cable as short as possible so as to reduce the noise level and leakage currents to a minimum. The motor cable screen must be connected to the metal cabinet of the frequency converter and to the metal cabinet of the motor. The screen connections are to be made with the biggest possible surface area (cable clamp). This is enabled by different installation devices in different frequency converters. Mounting with twisted screen ends (pigtails) is to be avoided, since these spoil the screening effect at high frequencies. If it is necessary to break the screen to install a motor isolator or motor relay, the screen must be continued at the lowest possible HF impedance.

Motor thermal protection

The electronic thermal relay in UL-approved frequency converters has received the UL-approval for single motor protection, when parameter 128 *Motor thermal protection* has been set for *ETR Trip* and parameter 105 *Motor current,* $I_{M,N}$ has been programmed to the rated motor current (see motor nameplate).

Brake connection

No.	81	82	Brake resistor
	R-	R+	terminals

The connection cable to the brake resistor must be screened/armoured. Connect the screen to the metal cabinet of the frequency converter and to the metal cabinet of the brake resistor by means of cable clamps. Dimension the cross-section of the brake cable to match the brake torque.

See the *Design Guide* for dimensioning of brake resistors.

NB!
Please note that voltages up to 850 V DC occur on the terminals.

Earth connection

As leak current to the earth is higher than 3.5 mA, the frequency converter must always be earthed according to prevailing national and local regulations. To guarantee that the earth cable has a good mechanical connection to terminal 95, the cable cross section must be at least 10 mm^2 or 2 rated earth wires that are terminated separately. To increase safety you can install an RCD (Residual Current Device), which guarantees that the frequency converter trips when leak current becomes too high. See also RCD Application Note MN.90.GX.02.

Load sharing

Load sharing provides the facility to connect several frequency converters' DC intermediate circuits. This requires that the installation is extended using extra fuses and AC coils (see drawing below). For load sharing parameter 400 *Brake function* must be set to *Load sharing* [5].

Use 6.3 mm Faston Plugs for DC (Load Sharing). Contact Danfoss or see instructions no. MI.50.NX.02 for further information.

No.	88	89	Loadsharing
	-	+	

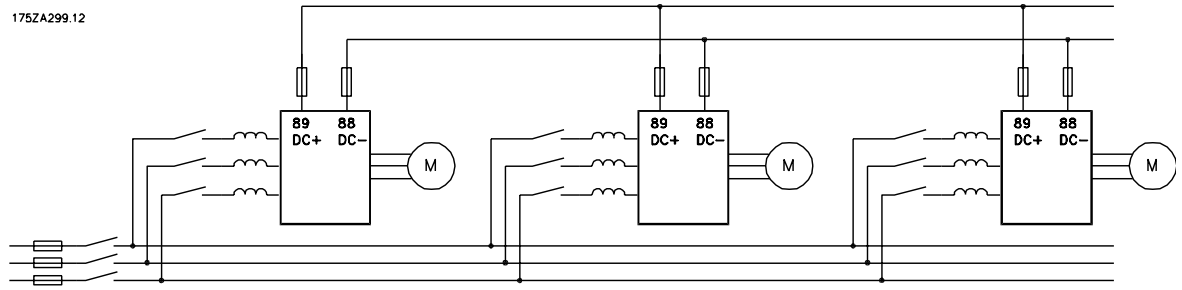

Note that voltage levels of up to 850 V DC may occur between terminals 88 and 89.

Tightening Torque, Power Terminals

Power and earth terminals must be tightened with the following torques:

VLT	Terminals	Torque [Nm]
2803-2875	Power mains brake	0.5-0.6
	Earth	2-3
2880-2882, 2840 PD2	Power mains brake	1.2-1.5
	Earth	2-3

Control of mechanical brake

In lifting/lowering applications you need to be able to control an electromagnetic brake. The brake is controlled using a relay output or digital output (terminal 46). The output must be kept closed (voltage-free) for the period of time during which the frequency converter is not able to 'support' the motor, for example due to the load being too great. Select *Mechanical brake control* in parameter 323 or 341 for applications with an electromagnetic brake.

When the output frequency exceeds the brake cut out value set in par. 138, the brake is released if the motor current exceeds the preset value in parameter 140. The brake is engaged when the output frequency is less than the brake engaging frequency, which is set in par. 139.

If the frequency converter is placed at alarm status or in an overvoltage situation the mechanical brake is cut in immediately.

NB!
This application is only for lifting/lowering without a counterbalance.

Access to control terminals

All terminals to the control cables are located underneath the protective plate on the front of the frequency converter. Remove the protective plate by pulling it downwards (see drawing).

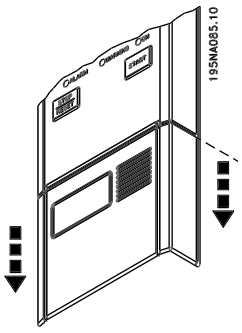

■ Electrical installation, control cables

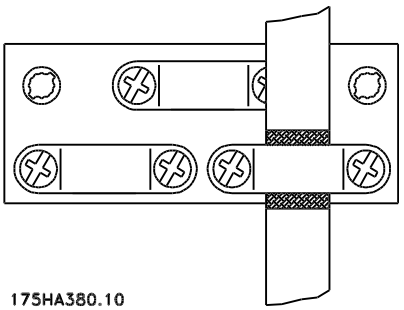

Control cables must be screened/armoured. The screen must be connected to the frequency converter chassis by means of a clamp. Normally, the screen must also be connected to the chassis of the controlling unit (use the instructions for the unit in question). In connection with very long control cables and analogue signals, in rare cases depending on the installation, 50/60 Hz earth loops may occur because of noise transmitted from mains supply cables. In this connection, it may be necessary to break the screen and possibly insert a 100 nF capacitor between the screen and the chassis.

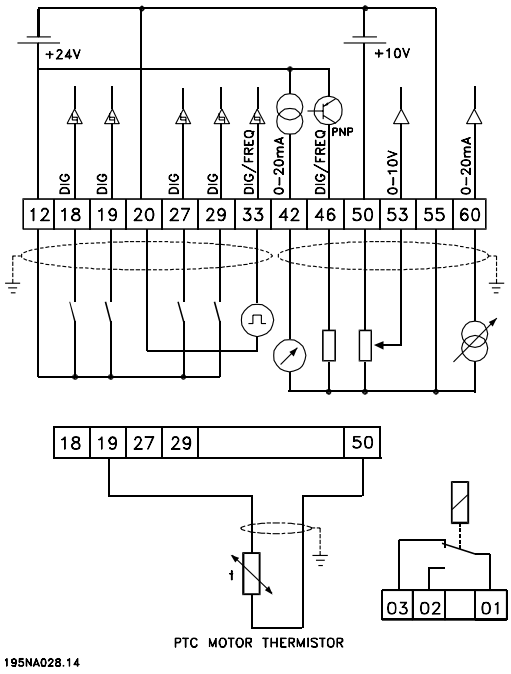

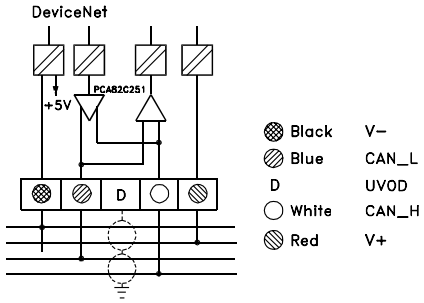

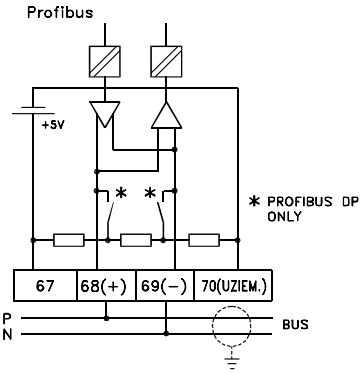

Tightening torques, control cables

Control wires must be connected with a tightening torque of 0.22-0.25 Nm.

Electrical installation, control terminals

See section entitled *Earthing of screened/armoured control cables* in the VLT 2800 Design Guide for the correct termination of control cables.

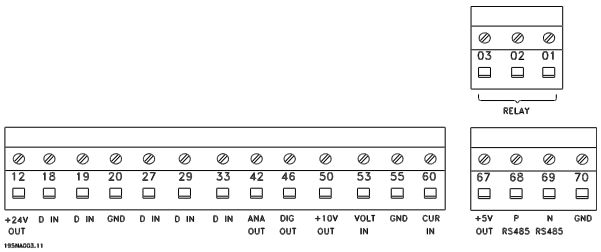

No.	Function
01-03	Relay outputs 01-03 can be used for indicating status and alarms/warnings.
12	24 V DC voltage supply.
18-33	Digital inputs.
20, 55	Common frame for input and output terminals.
42	Analog output for displaying frequency, reference, current or torque.
46[1]	Digital output for displaying status, warnings or alarms, as well as frequency output.
50	+10 V DC supply voltage for potentiometer or thermistor.
53	Analogue voltage input 0 - 10 V DC.
60	Analogue current input 0/4 - 20 mA.
67[1]	+ 5 V DC supply voltage to Profibus.
68, 69[1]	RS 485, Serial communication.
70[1]	Frame for terminals 67, 68 and 69. Normally this terminal is not to be used.

1. The terminals are not valid for DeviceNet/CANopen. See also the DeviceNet manual, MG.90.BX.YY for further details.

Relay connection

See parameter 323 *Relay output* for programming of relay output.

Nr.		
	01 - 02	1 - 2 make (normally open)
	01 - 03	1 - 3 break (normally closed)

NB!

Please note that the cable jacket for the relay must cover the first row of control card terminals - otherwise the galvanic isolation (PELV) cannot be maintained. Max. cable diameter: 4 mm. See drawing.

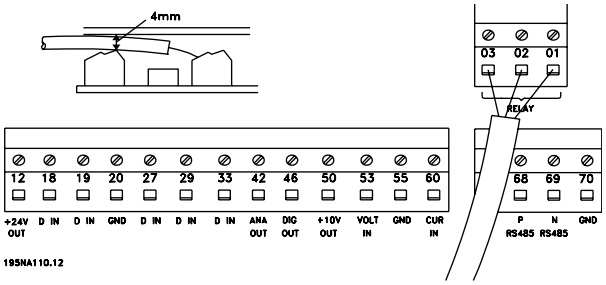

Switches 1-4

The dip switch is only on the control card with Profibus DP communication.

The switch position shown is the factory setting.

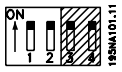

Switches 1 and 2 are used as cable termination for the RS 485 interface. If the frequency converter is located as the first or last unit in the bus SYSTEM, switches 1 and 2 must be ON. On the remaining frequency converters, switches 1 and 2 must be OFF.

Switches 3 and 4 are not applied.

VLT Software Dialog

Connection to terminals 68-70 or Sub D:

- PIN 3 GND
- PIN 8 P-RS 485
- PIN 9 N-RS 485

Sub D plug

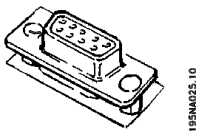

An LCP 2 control unit can be connected to the Sub D plug on the control card. Ordering number: 175N0131. LCP control unit with ordering number 175Z0401 is not to be connected.

Connection examples

Start/stop

Start/stop using terminal 18 and coasting stop using terminal 27.

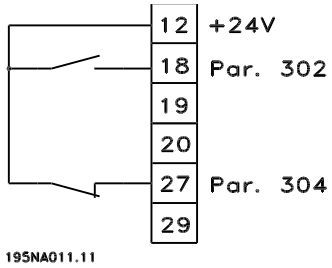

Par. 302 *Digital input* = *Start* [7]

Par. 304 *Digital input* = *Coasting stop inverted* [2]

For Precise start/stop the following settings are made:

Par. 302 *Digital input* = *Precise start/stop* [27]

Par. 304 *Digital input* = *Coasting stop inverted* [2]

Pulse start/stop

Pulse start using terminal 18 and pulse stop using terminal 19. In addition, the jog frequency is activated via terminal 29.

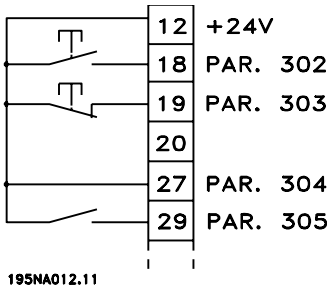

Par. 302 *Digital input* = *Pulse start* [8]

Par. 303 *Digital input* = *Stop inverted* [6]

Par. 304 *Digital input* = *Coasting stop inverted* [2]

Par. 305 *Digital input* = *Jog* [13]

Speed up/down

Speed up/down using terminals 29/33.

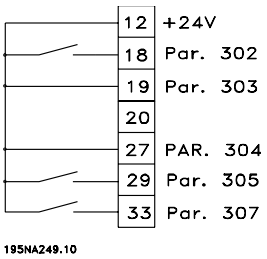

Par. 302 *Digital input* = *Start* [7]

Par. 303 *Digital input* = *Freeze reference* [14]

Par. 305 *Digital input* = *Speed up* [16]

Par. 307 *Digital input* = *Speed down* [17]

Potentiometer reference

Voltage reference via a potentiometer.

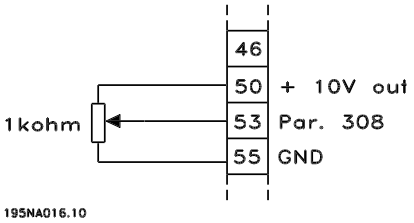

Par. 308 *Analog input* = *Reference* [1]

Par. 309 *Terminal 53, min. scaling* = 0 Volt

Par. 310 *Terminal 53, max. scaling* = 10 Volt

Connection of a 2-wire transmitter

Connection of a 2-wire transmitter as feedback to terminal 60.

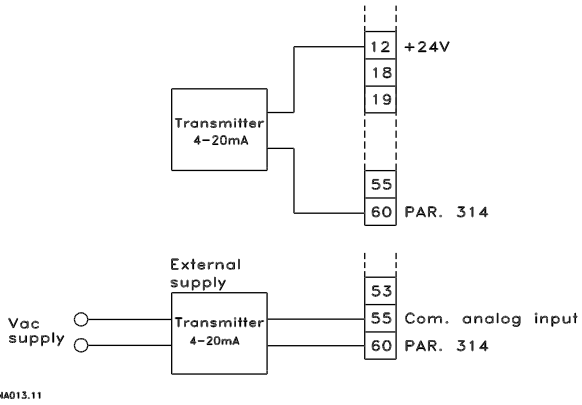

Par. 314 *Analog input* = *Feedback* [2]

Par. 315 *Terminal 60, min. scaling* = 4 mA

Par. 316 *Terminal 60, max. scaling* = 20 mA

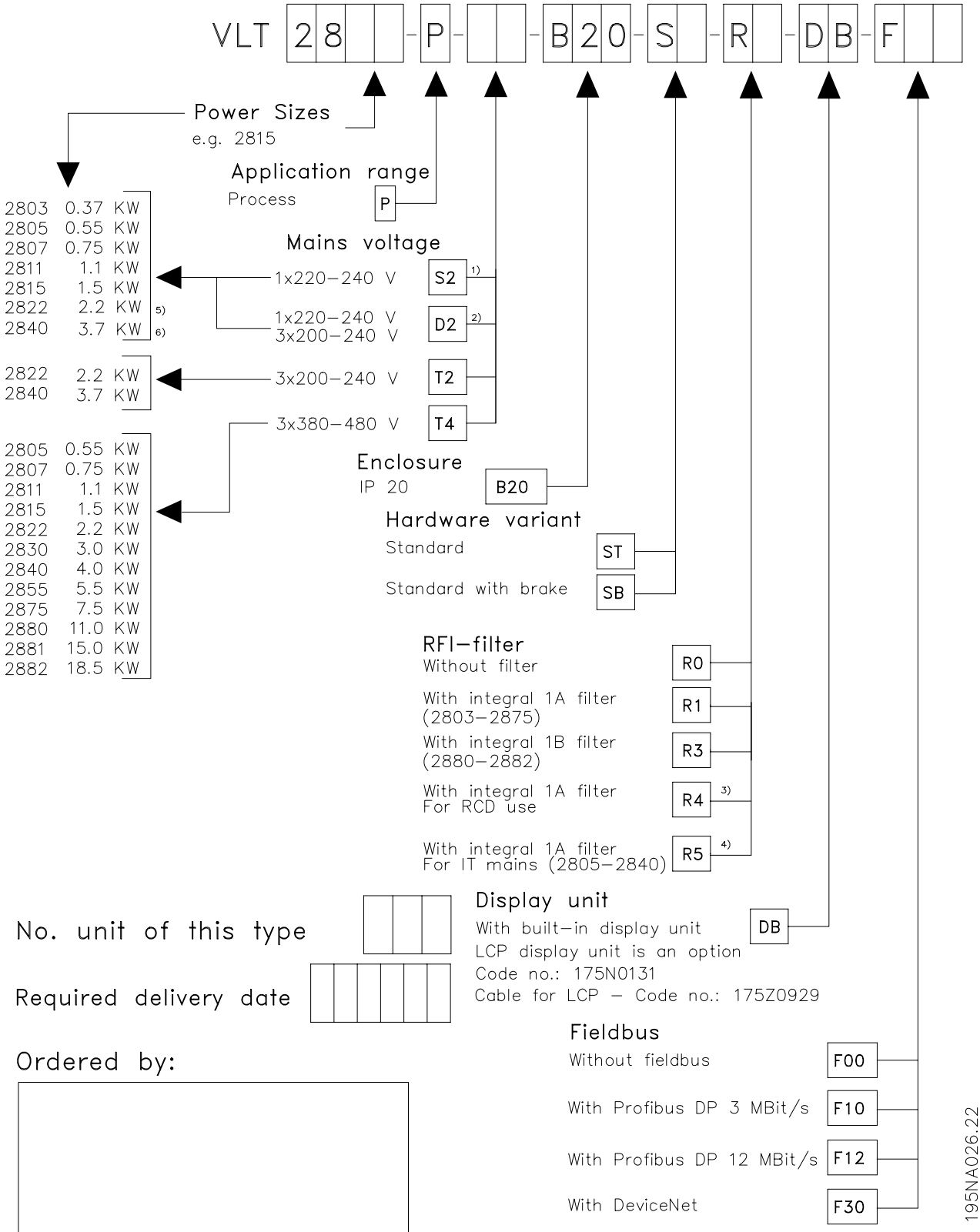
VLT 28 - P - - B20 - S - R - DB - F
Power Sizes
e.g. 2815
Application range
Process
P
Mains voltage
1x220–240 V
S2
1)
1x220–240 V
3x200–240 V
D2
2)
3x200–240 V
T2
3x380–480 V
T4
2803 0.37 KW
2805 0.55 KW
2807 0.75 KW
2811 1.1 KW
2815 1.5 KW
2822 2.2 KW 5)
2840 3.7 KW 6)
2822 2.2 KW
2840 3.7 KW
2805 0.55 KW
2807 0.75 KW
2811 1.1 KW
2815 1.5 KW
2822 2.2 KW
2830 3.0 KW
2840 4.0 KW
2855 5.5 KW
2875 7.5 KW
2880 11.0 KW
2881 15.0 KW
2882 18.5 KW
Enclosure
IP 20
B20
Hardware variant
Standard
ST
Standard with brake
SB
RFI–filter
Without filter
R0
With integral 1A filter
(2803–2875)
R1
With integral 1B filter
(2880–2882)
R3
With integral 1A filter
For RCD use
R4
3)
With integral 1A filter
For IT mains (2805–2840)
R5
4)
Display unit
With built–in display unit
DB
LCP display unit is an option
Code no.: 175N0131
Cable for LCP – Code no.: 175Z0929
Fieldbus
Without fieldbus
F00
With Profibus DP 3 MBit/s
F10
With Profibus DP 12 MBit/s
F12
With DeviceNet
F30
No. unit of this type
Required delivery date
Ordered by:
Date:
Please take a copy of the ordering form.
Fill it in and send or fax your order
to the nearest Danfoss rep. office.
1) S2 = Unit can only be ordered with RFI filter
2) D2 = Unit cannot be ordered with RFI filter
3) = Unit can only be ordered with S2
4) = Unit can only be ordered with T4
5) = Only available in 2822PD2 STR0 version
6) = Only available in 2840PD2 STR0 version
195NA026.22

Display readout

Fr
The frequency converter shows the present output frequency in Hertz [Hz].

Io
The frequency converter shows the present output current in Amps [A].

Uo
The frequency converter shows the present output voltage in Volt [V].

Ud
The frequency converter shows the intermediate circuit voltage in Volt [V].

Po
The frequency converter shows the calculated output in kilowatt [kW].

notrun
This message is shown if an attempt is made to change a parameter value while the motor is running. Stop the motor to change the parameter value.

LCP
This message is shown if an LCP 2 control unit is fitted and the [QUICK MENU] or [CHANGE DATA] key is activated. If an LCP 2 control unit is fitted you can only change parameters with that.

Ha
The frequency converter shows the present Hand mode reference frequency in Herz (Hz).

SC
The frequency converter shows scaled output frequency (the present output frequency x parameter 008).

Warnings/alarm messages

A warning or an alarm will appear in the display as a numerical code **Err. xx**. A warning will be shown on the display until the fault has been corrected, while an alarm will continue to flash until the [STOP/RESET] key is activated.The table shows the various warnings and alarms, and whether the fault locks the frequency converter. After a *Trip locked* the mains supply is cut off and the fault is corrected. The mains supply is reconnected and the frequency converter is reset. The frequency converter is now ready. A *Trip* can be reset manually in three ways:

1. Via the operating key [STOP/RESET].
2. Via a digital input.
3. Via serial communication.

It is also possible to choose an automatic reset in parameter 405 *Reset function*. When a cross appears in both warning and alarm, this can mean that a warning comes before an alarm. It can also mean that it is possible for the user to programme whether a warning or an alarm will appear for a given fault. For example, this is possible in parameter 128 *Motor thermal protection*. After a trip the motor will coast, and alarm and warning will blink on the frequency converter, but if the fault disappears only the alarm will blink. After a reset the frequency converter will be ready to start operation again.

No.	Description	Warning	Alarm	Trip locked
2	Live zero error (LIVE ZERO ERROR)	X	X	X
4	Mains phase loss (MAINS PHASE LOSS)	X	X	X
5	Voltage warning high (DC LINK VOLTAGE HIGH)	X		
6	Voltage warning low (DC LINK VOLTAGE LOW)	X		
7	Overvoltage (DC LINK OVERVOLT)	X	X	X
8	Undervoltage (DC LINK UNDERVOLT)	X	X	X
9	Inverter overload (INVERTER TIME)	X	X	
10	Motor overloaded (MOTOR, TIME)	X	X	
11	Motor thermistor (MOTOR THERMISTOR)	X	X	
12	Current limit (CURRENT LIMIT)	X	X	
13	Overcurrent (OVERCURRENT)	X	X	X
14	Earth fault (EARTH FAULT)		X	X
15	Switch mode fault (SWITCH MODE FAULT)		X	X
16	Short-circuit (CURR. SHORT CIRCUIT)		X	X
17	Serial communication timeout (STD BUS TIMEOUT)	X	X	
18	HPFB bus timeout (HPFB TIMEOUT)	X	X	
33	Out of frequency range (OUT FREQ RNG/ROT LIM)	X		
34	HPFB communication fault (PROFIBUS OPT. FAULT)	X	X	
35	Inrush fault (INRUSH FAULT)		X	X
36	Overtemperature (OVERTEMPERATURE)	X	X	
37-45	Internal fault (INTERNAL FAULT)		X	X
50	AMT not possible		X	
51	AMT fault re. nameplate data (AMT TYPE.DATA FAULT)		X	
54	AMT wrong motor (AMT WRONG MOTOR)		X	
55	AMT timeout (AMT TIMEOUT)		X	
56	AMT warning during AMT (AMT WARN. DURING AMT)		X	
99	Locked (LOCKED)	X		

LED indication	
Warning	yellow
Alarm	red
Trip locked	yellow and red

WARNING/ALARM 2: Live zero fault
The voltage or current signal on terminal 53 or 60 is below 50% of the preset value in parameter 309 or 315 *Terminal, min. scaling*.

WARNING/ALARM 4: Mains phase fault
No phase on mains supply side. Check the supply voltage to the frequency converter. This fault is only active in 3-phase mains supply. The alarm can also occur when the load is pulsing. In this instance the pulses must be dampened, e.g. using an inertia disc.

WARNING 5: Voltage warning high
If the intermediate circuit voltage (UDC) is higher than *Voltage warning high* the frequency converter will give a warning and the motor will continue to run unchanged. If the UDC remains above the voltage warning limit, the inverter will trip after a set time. The time depends on the device, and is set at 5 - 10 sec. Note: The frequency converter will trip with an alarm 7 (overvoltage). A voltage warning can occur when the connected mains voltage is too high. Check whether the supply voltage is suitable for the frequency converter, see *Technical data*. A voltage warning can also occur if the motor frequency is reduced too quickly due to ramp down time being too short.

WARNING 6: Voltage warning low
If the intermediate circuit voltage (UDC) is lower than *Voltage warning low* the frequency converter will give a warning and the motor will continue to run unchanged. A voltage warning can occur when the connected mains voltage is too low. Check whether the supply voltage is suitable for the frequency converter, see *Technical data*. When the frequency converter is switched off a brief warning 6 (and warning 8) appears.

WARNING/ALARM 7: Overvoltage
If the intermediate voltage (UDC) goes over the inverter's *Overvoltage limit* the inverter will be switched off until the UDC has once more fallen below the overvoltage limit. If the UDC remains above the overvoltag limit the inverter will trip after a set time. The time depends on the device, and is set at 5 - 10 sec. An

overvoltage in the UDC can occur when the motor frequency is reduced too quickly due to ramp down time being too short. When the inverter is switched off a trip reset is generated. Note: *Voltage warning high* (warning 5) will thus also be able to generate an alarm 7.

WARNING/ALARM 8: Undervoltage
If the intermediate circuit voltage (UDC) is lower than the inverter's *Undervoltage limit* the inverter will be switched off until the UDC once more goes above the undervoltage limit. If the UDC remains under the *undervoltage limit*, the inverter will trip after a set time. The time depends on the device, and is set at 2 - 15 sec. An undervoltage can occur when the connected mains voltage is too low. Check whether the supply voltage is suitable for the frequency converter, see *Technical data*. When the frequency converter is switched off a alarm 8 (and alarm 6) is displayed briefly and a trip reset is generated. Note: *Voltage warning low* (warning 6) will thus also be able to generate an alarm 8.

WARNING/ALARM 9: Inverter overload
Electronic thermal inverter protection indicates that the frequency converter is close to tripping due to overloading (output current too high for too long). The counter for electronic thermal inverter protection gives a warning at 98% and trips at 100% accompanied by an alarm. The frequency converter cannot be reset until the counter drops below 90%. This fault arises because the frequency converter has been overloaded for too long.

WARNING/ALARM 10: Motor overloaded
According to the electronic thermal inverter protection the motor is too hot. In parameter 128 the user can select whether the frequency converter should emit a warning or an alarm when the counter reaches 100%. This fault is due to the motor being overloaded by more than 100% for too long. Check that motor parameters 102-106 are set correctly.

WARNING/ALARM 11: Motor thermistor
The motor is too hot or the thermistor/thermistor connection has been disconnected. In parameter 128 *Thermal motor protection* the user can select whether the frequency transformer emits a warning or an alarm. Check that the PTC thermistor is correctly connected between terminals 18, 19, 27 or 29 (digital input) and terminal 50 (+ 10 V supply).

WARNING/ALARM 12: Current limit
The output current is greater than the value in parameter 221 *Current Limit* $_{LIM}$, and the frequency converter will trip after a set time, selected in parameter 409 *Trip delay overcurrent*.

WARNING/ALARM 13: Overcurrent
The inverter's peak current limit (approx. 200% of rated output current) has been exceeded. The warning will last approx. 1-2 sec, and the frequency converter will then trip and emit an alarm. Switch off the frequency converter and check whether the motor shaft can be turned, and whether the size of the motor is suitable for the frequency converter.

ALARM 14: Earth fault
There is a discharge from the output phases to earth, either in the cable between the frequency converter and the motor, or in the motor. Turn off the frequency converter and remove the earth fault.

ALARM 15: Switch mode fault
Fault in switch mode power supply (internal supply). Contact your Danfoss supplier.

ALARM: 16: Short-circuit
There is a short-circuit on the motor terminals or in the motor. Disconnect the mains supply to the frequency converter and remove the short-circuit.

WARNING/ALARM 17: Serial communication timeout
There is no serial communication to the frequency converter. The warning will only be active when 514 *Bus timeout function* is set to a value other than OFF. If parameter 514 *Bus timeout function* is set to *Stop and trip* [5], it will first give a warning and then ramp down and trip out accompanied by an alarm. Parameter 513 *Bus timeout* can if required be increased.

WARNING/ALARM 18: HPFB bus timeout
There is no serial communication to the frequency converter's communication option card. This warning will only be active when parameter 804 *Bus timeout function* is set to a value other than OFF. If parameter 804 *Bus timeout function* is set to *Stop and trip*, it will first give a warning and then ramp down and trip out accompanied by an alarm. Parameter 803 *Bus timeout* can if required be increased.

WARNING 33: Out of frequency range
This warning is active if the output frequency has reached *Output frequency low limit* (parameter 201) or *Output frequency high limit* (parameter 202). If the frequency converter is in *Process regulation, closed loop* (parameter 100) the warning will be active in the display. If the frequency converter is in another mode than *Process regulation, closed loop*, bit 008000 *Out of frequency range* in extended status word will be active, but there will not be a warning in the display.

WARNING/ALARM 34: HPFB communication fault
Communication fault only occurs in Fieldbus versions. Regarding alarmtype, please see parameter 953 in fieldbus literature.

ALARM 35: Inrush fault
This alarm occurs when the frequency converter has been connected to the mains supply too many times within 1 minute.

WARNING/ALARM 36: Overtemperature
If the temperature inside the power module rises above 75 - 85 °C (depending on the device) the frequency converter will emit a warning, and the motor will continue to run unchanged. If the temperature continues to rise, the switch frequency is reduced automatically. See *Temperature-dependent switching frequency*.
If the temperature inside the power module rises above 92 - 100 °C (depending on the unit) the frequency converter will cut out. The temperature fault cannot be reset until the temperature has dropped to below 70 °C. The tolerance is ± 5 °C. The temperature can be caused by the following:

- The ambient temperature too high.
- Motor cable too long.
- Too high mains voltage.

ALARM 37-45: Internal fault
If one of these failures occurs, please contact Danfoss.

Alarm 37, internal fault number 0: Communication fault between control card and BMC.

Alarm 38, internal fault number 1: Flash EEPROM fault on control card.

Alarm 39, internal fault number 2: RAM fault on control card.

Alarm 40, internal fault number 3: Calibration constant in EEPROM.

Alarm 41, internal fault number 4: Data values in EEPROM.

Alarm 42, internal fault number 5: Fault in motor parameter database.

Alarm 43, internal fault number 6: General power card fault.

Alarm 44, internal fault number 7: Minimum software version of control card or BMC.

Alarm 45, internal fault number 8: I/O fault (digital input/output, relay or analog input/output).

NB!
When restarting after an alarm 38-45, the frequency converter will display an alarm 37. In parameter 615 the actual alarm code can be read.

ALARM 50: AMT not possible
One of the following three possibilities can occur:

- The calculated R_S value falls outside permitted limits.
- The motor current in at least one of the motor phases is too low.
- The motor in use is too small for AMT calculations to be performed.

ALARM 51: AMT Fault regarding nameplate data
There is inconsistency between the registered motor data. Check the motor data for the relevant setup.

ALARM 52: AMT missing motor phase
The AMT function has detected a missing motor phase.

ALARM 55: AMT timeout
Calculations are taking too long, possibly due to noise on the motor cables.

ALARM 56: AMT warning during AMT
A frequency converter warning is given while AMT is being performed.

WARNING 99: Locked
See parameter 18.

Alarm/warning limits:

	Without brake	With brake	Without brake	With brake
VLT 2800	1 / 3 x 200 - 240 V [VDC]	1 / 3 x 200 - 240 V [VDC]	3 x 380 - 480 V [VDC]	3 x 380 - 480 V [VDC]
Undervoltage	215	215	410	410
Voltage warning low	230	230	440	440
Voltage warning high	385	400	765	800
Overvoltage	410	410	820	820

The voltages stated are the intermediate circuit voltage of the frequency converter with a tolerance of ± 5 %. The corresponding line voltage is the intermediate circuit voltage divided by 1,35.

Warning words, extended status words and Alarmwords

Warning words, status words and Alarm words appear in the display in Hex format. If there are several warnings, status words or alarms, a total of all the warnings, status words or alarms will be displayed. Warning words, status words and alarm words can also be read out using the serial bus in parameters 540, 541 and 538 respectively.

Bit (Hex)	Warning words
000008	HPFB bus timeout
000010	Standard bus timeout
000040	Current limit
000080	Motor thermistor
000100	Motor overload
000200	Inverter overload
000400	Undervolt
000800	Overvolt
001000	Voltage warning low
002000	Voltage warning high
004000	Phase loss
010000	Live zero error
400000	Out of frequency range
800000	Profibus communication fault
40000000	Switch mode warning
80000000	Heat sink temperature high

Bit (Hex)	Extended status words
000001	Ramping
000002	AMT running
000004	Start forw./reverse
000008	Slow down
000010	Catch-up
000020	Feedback high
000040	Feedback low
000080	Output current high
000100	Output current low
000200	Output frequency high
000400	Output frequency low
002000	Braking
008000	Out of frequency range

Bit (Hex)	Alarm words
000002	Triplock
000004	AMT tuning fail
000040	HPFB bus timeout
000080	Standard bus timeout
000100	Curr. short circuit
000200	Switch mode fault
000400	Earth fault
000800	Overcurrent
002000	Motor thermistor
004000	Motor overload
008000	Inverter overload
010000	Undervolt
020000	Overvolt
040000	Phase loss
080000	Live zero error
100000	Heat sink temperature too high
2000000	Profibus communication fault
8000000	Inrush fault
10000000	Internal fault

Special conditions

Aggressive environments

As all other electronic equipment, a frequency converter contains a number of mechanical and electronic components, which to a varying extent are vulnerable to environmental impact.

Consequently, the frequency converter is not to be installed in environments, where liquids, particles or gases are in the air that would impact and damage the electronics. Unless the necessary measures are taken to protect the frequency converter, there is a risk of stoppages, which reduce the service life of the frequency converter.

Liquids can be carried through the air and condense in the frequency converter. In addition, liquids may facilitate galvanic corrosion of components and metal parts. Steam, oil and brine may cause corrosion of components and metal parts. In these areas, it is recommended to fit units in cabinets. As a minimum, cabinets should be enclosure IP 54.

Particles in the air, such as dust particles, may lead to mechanical, electrical and thermal faults on the frequency converter. Typical indicators that there are too many particles in the air are dust particles around the frequency converter fan. In very dusty areas, cabinet fitting of units is recommended. As a minimum, cabinets should be enclosure IP 54.

Aggressive gases, such as sulphur, nitrogen and chlorine compounds, together with high humidity and temperature, facilitate possible chemical processes on the components of the frequency converter. These chemical processes quickly impact and damage the electronics. In these areas, cabinet fitting with fresh-air circulation in the cabinet is recommended, thereby ensuring that aggressive gases are kept away from the frequency converter.

NB!
Fitting of frequency converters in aggressive environments increases the risk of stoppages, in addition to considerably reducing the service life of the unit.

Before the frequency converter is installed, it must be checked whether there are liquids, particles or gases in the air. This can be done by looking at existing installations in the same environment. Typical indicators of harmful airborne liquids are water or oil on metal parts or corrosion of metal parts. Too many dust particles are typically observed on top of installation cabinets and on existing electrical installations. Indicators that there are aggressive gases in the air are copper rails and cable ends that are black on existing electrical installations.

Derating for ambient temperature

The ambient temperature ($T_{AMB,MAX}$) is the maximum temperature allowed. The average ($T_{AMB,AVG}$) measured over 24 hours, must be at least 5 °C lower. If the frequency converter operates at temperatures above 45 °C, a derating of the rated output current is necessary.

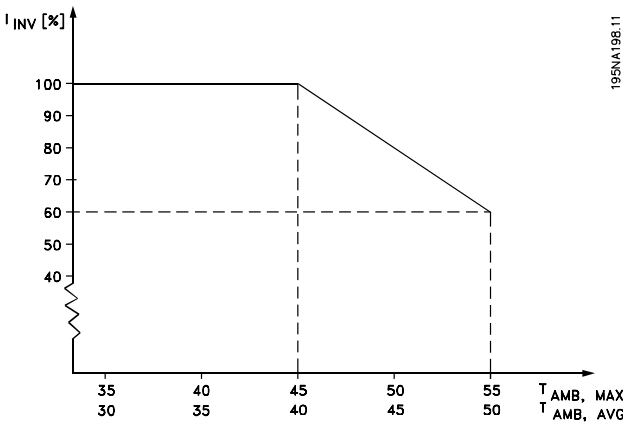

Derating for high switching frequency - VLT 2800

A higher switching frequency (to be set in parameter 411, *Switching frequency*) leads to higher losses in the electronics of the frequency converter.

VLT 2800 has a pulse pattern in which it is possible to set the switching frequency from 3.0- 10.0/14.0 kHz.

The frequency converter will automatically derate the rated output current $I_{VLT,N,}$ when the switching frequency exceeds 4.5 kHz.

In both cases, the reduction is carried out linearly, down to 60% of $I_{VLT,N}$.

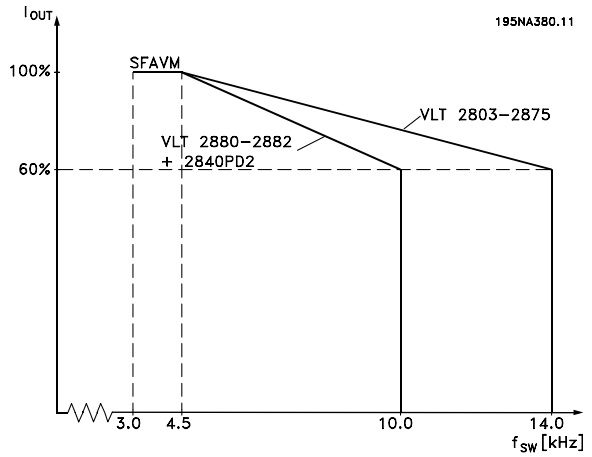

Temperature-dependent switch frequency

This function ensures the highest possible switch frequency without the frequency converter becoming thermally overloaded. The internal temperature is the actual expression of the degree to which the switch frequency can be based on the load, the ambient temperature, the supply voltage and the cable length.
The function ensures that the frequency converter automatically adjusts the switch frequency between $f_{sw,\ min}$ and $f_{sw,\ max}$ (parameter 411), see drawing below.

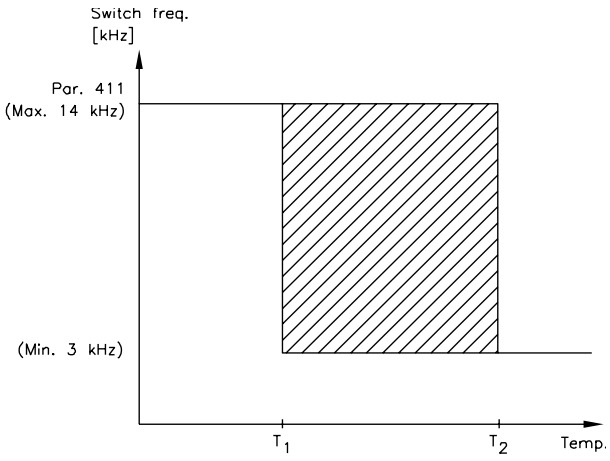

175NA020.13

When using the LC filter the minimum switch frequency is 4.5 kHz.

Galvanic Isolation (PELV)

PELV (Protective Extra Low Voltage) insulation is achieved by inserting galvanic isolators between the control circuits and circuits that are connected to the mains potential. The VLT is designed to meet the requirements for protective separation by means of having the necessary creepage and clearance distances. These requirements are described in standard EN 50 178. It is also a requirement that the installation is carried out as described in local/national regulations regarding PELV.
The Protective Extra Low Voltage (PELV) requirements stated in IEC 61800-5-1 are not fulfilled at altitudes above 2000 m (6562 ft.). For 200V frequency converters the requirements are not fulfilled at altitudes above 5000 m (16 404 ft.). Please contact Danfoss Drives for further information.

All control terminals, terminals for serial communication and relay terminals are safely separated from the mains potential, i.e. they comply with the PELV requirements. Circuits that are connected to control terminals 12, 18, 19, 20, 27, 29, 33, 42, 46, 50, 53, 55 and 60 are galvanically connected to one another. Serial communication connected to fieldbus is galvanically insulated from the control terminals, although this is only a functional insulation.
The relay contacts on terminals 1 - 3 are insulated from the other control circuits with reinforced/double isolation, i.e. PELV is observed for these, even though there is mains potential at the relay terminals.

The circuit elements described below form the safe electric separation. They fulfill the requirements for re-

inforced/double insulation and associated testing pursuant to EN 50 178.

1. Transformer and optical separation in voltage supply.
2. Optical insulation between Basic Motor Control and control card.
3. Insulation between the control card and the power part.
4. Relay contacts and terminals relating to other circuits on the control card.

PELV insulation of the control card is guaranteed under the following conditions:

- TT network with maximum 300 Vrms between phase and earth.
- TN network with maximum 300 Vrms between phase and earth.
- IT network with maximum 400 Vrms between phase and earth.

In order to maintain PELV all connections made to the control terminals must be PELV, e.g. thermistor must be reinforced/double insulated.

■ **EMC emission**

The following system results are achieved on a system consisting of a VLT Series 2800 with screened/armoured control cable, control box with potentiometer, screened/armoured motor cable and screened/armoured brake cable as well as an LCP2 with cable.

VLT 2803-2875	Emission			
	Industrial environment		Residential, commercial and light industry	
	EN 55011 class 1A		EN 55011 class 1B	
Setup	Cable-borne 150 kHz- 30 MHz	Radiated 30 MHz - 1 GHz	Cable-borne 150 kHz - 30 MHz	Radiated 30 MHz - 1 GHz
3 x 480 V version with 1A RFI filter	Yes 25 m screened/armoured	Yes 25 m screened/armoured	No	No
3 x 480 V version with 1A RFI filter (R5: For IT mains)	Yes 5 m screened/armoured	Yes 5 m screened/armoured	No	No
1 x 200 V version with 1A RFI filter [1.]	Yes 40 m screened/armoured	Yes 40 m screened/armoured	Yes 15 m screened/armoured	No
3 x 200 V version with 1A RFI filter (R4: For use with RCD)	Yes 20 m screened/armoured	Yes 20 m screened/armoured	Yes 7 m screened/armoured	No
3 x 480 V version with 1A +1B RFI filter	Yes 50 m screened/armoured	Yes 50 m screened/armoured	Yes 25 m screened/armoured	No
1 x 200 V version with 1A +1B RFI filter [1.]	Yes 100 m screened/armoured	Yes 100 m screened/armoured	Yes 40 m screened/armoured	No
VLT 2880-2882	Emission			
	Industrial environment		Residential, commerce and light industry	
	EN 55011 class 1A		EN 55011 class 1B	
Setup	Cable-borne 150 kHz- 30 MHz	Radiated 30 MHz - 1 GHz	Cable-borne 150 kHz - 30 MHz	Radiated 30 MHz - 1 GHz
3 x 480 V version with 1B RFI filter	Yes 50 m	Yes 50 m	Yes 50 m	No

1. For VLT 2822-2840 3 x 200-240 V the same values apply as for the 480 V version with 1A RFI filter.

- **EN 55011: Emission**Limits and methods of measurement of radio disturbance characteristics of industrial, scientific and medical (ISM) high-frequency equipment.

Class 1A:
Equipment used in an industrial environment.

Class 1B:
Equipment used in areas with a public supply network (residential, commerce and light industry).

■ **UL Standard** This device is UL-approved.

General technical data

Mains supply (L1, L2, L3):	
Supply voltage VLT 2803-2840 220-240 V (N, L1)	1 x 220/230/240 V ±10%
Supply voltage VLT 2803-2840 200-240 V	3 x 200/208/220/230/240 V ±10%
Supply voltage VLT 2805-2882 380-480 V	3 x 380/400/415/440/480 V ±10%
Supply voltage VLT 2805-2840 (R5)	380 / 400 V + 10 %
Supply frequency	50/60 Hz ± 3 Hz
Max. imbalance on supply voltage	± 2.0% of rated supply voltage
True Power Factor (λ)	0.90 nominal at rated load
Displacement Power Factor (cos φ)	near unity (> 0.98)
Number of connections at supply input L1, L2, L3	2 times/min.
Max. short-circuit value	100,000 A

See Special Conditions section in the Design Guide

Output data (U, V, W):	
Output voltage	0 - 100% of supply voltage
Output frequency	0.2 - 132 Hz, 1 - 1000 Hz
Rated motor voltage, 200-240 V units	200/208/220/230/240 V
Rated motor voltage, 380-480 V units	380/400/415/440/460/480 V
Rated motor frequency	50/60 Hz
Switching on output	Unlimited
Ramp times	0.02 - 3600 sec.

Torque characteristics:	
Starting torque (parameter 101 Torque characteristic = Constant torque)	160% in 1 min.*
Starting torque (parameter 101 Torque characteristics = Variable torque)	160% in 1 min.*
Starting torque (parameter 119 *High starting torque*)	180% for 0.5 sec.
Overload torque (parameter 101 Torque characteristic = Constant torque)	160%*
Overload torque (parameter 101 Torque characteristic = Variable torque)	160%*

Percentage relates to frequency converter's nominal current.
** VLT 2822 PD2 / 2840 PD2 1 x 220 V only 110% in 1 min.*

Control card, digital inputs:	
Number of programmable digital inputs	5
Terminal number	18, 19, 27, 29, 33
Voltage level	0 - 24 V DC (PNP positive logic)
Voltage level, logic '0'	< 5 V DC
Voltage level, logic '1'	> 10 V DC
Maximum voltage on input	28 V DC
Input resistance, R_i (terminals 18, 19, 27, 29)	approx. 4 kΩ
Input resistance, R_i (terminal 33)	approx. 2 kΩ

All digital inputs are galvanically isolated from the supply voltage (PELV) and other high-voltage terminals. See section entitled Galvanic Isolation.

Control card, analog inputs:	
Number of analog voltage inputs	1 pcs.
Terminal number	53
Voltage level	0 - 10 V DC (scaleable)
Input resistance, R_i	approx. 10 kΩ
Max. voltage	20 V
Number of analog current inputs	1 pcs.
Terminal number	60
Current level	0/4 - 20 mA (scaleable)
Input resistance, R_i	approx. 300 Ω
Max. current	30 mA
Resolution for analog inputs	10 bit
Accuracy of analog inputs	Max. error 1% of full scale
Scan interval	13.3 msec

The analog inputs are galvanically isolated from the supply voltage (PELV) and other high-voltage terminals. See section entitled Galvanic Isolation.

Control card, pulse inputs:	
Number of programmable pulse inputs	1
Terminal number	33
Max. frequency at terminal 33	67.6 kHz (Push-pull)
Max. frequency at terminal 33	5 kHz (open collector)
Min. frequency at terminal 33	4 Hz
Voltage level	0 - 24 V DC (PNP positive logic)
Voltage level, logic '0'	< 5 V DC
Voltage level, logic '1'	> 10 V DC
Maximum voltage on input	28 V DC
Input resistance, R_i	approx. 2 kΩ
Scan interval	13.3 msec
Resolution	10 bit
Accuracy (100 Hz- 1 kHz) terminal 33	Max. error: 0.5% of full scale
Accuracy (1 kHz - 67.6 kHz) terminal 33	Max. error: 0.1% of full scale

The pulse input (terminal 33) is galvanically isolated from the supply voltage (PELV) and other high-voltage terminals. See section entitled Galvanic Isolation.

Control card, digital/frequency output:	
Number of programmable digital/pulse outputs	1 pcs.
Terminal number	46
Voltage level at digital/frequency output	0 - 24 V DC (O.C PNP)
Max. output current at digital/frequency output	25 mA.
Max. load at digital/frequency output	1 kΩ
Max. capacity at frequency output	10 nF
Minimum output frequency at frequency output	16 Hz
Maximum output frequency at frequency output	10 kHz
Accuracy on frequency output	Max. error: 0.2 % of full scale
Resolution on frequency output	10 bit

The digital output is galvanically isolated from the supply voltage (PELV) and other high-voltage terminals. See section entitled Galvanic Isolation.

Control card, analog output:	
Number of programmable analog outputs	1
Terminal number	42
Current range at analog output	0/4 - 20 mA
Max. load to common at analog output	500 Ω
Accuracy on analog output	Max. error: 1.5 % of full scale
Resolution on analog output	10 bit

The analog output is galvanically isolated from the supply voltage (PELV) and other high-voltage terminals. See section entitled Galvanic Isolation.

Control card, 24 V DC output:	
Terminal number	12
Max. load	130 mA

The 24 V DC supply is galvanically isolated from the supply voltage (PELV) , but has the same potential as the analogue and digital inputs and outputs. See section entitled Galvanic Isolation.

Control card, 10 V DC output:	
Terminal number	50
Output voltage	10.5 V ±0.5 V
Max. load	15 mA

The 10 V DC supply is galvanically isolated from the supply voltage (PELV) and other high-voltage terminals. See section entitled Galvanic Isolation.

Control card, RS 485 serial communication:	
Terminal number	68 (TX+, RX+), 69 (TX-, RX-)
Terminal number 67	+ 5 V
Terminal number 70	Common for terminals 67, 68 and 69

Full galvanic isolation. See section entitled Galvanic Isolation.
For CANopen/DeviceNet units, see VLT 2800 DeviceNet manual, MG.90.BX.YY.

Relay outputs:[1)]	
Number of programmable relay outputs	1
Terminal number, control card (resisitvie and inductive load)	1-3 (break), 1-2 (make)
Max. terminal load (AC1) on 1-3, 1-2, control card	250 V AC, 2 A, 500 VA
Max. terminal load (DC1 (IEC 947)) on 1-3, 1-2, control card	25 V DC, 2 A /50 V DC, 1A, 50W
Min. terminal load (AC/DC) on 1-3, 1-2, control card	24 V DC 10 mA, 24 V AC 100 mA

The relay contact is separated from the rest of the circuit by strengthened isolation.

Note: Rated values resistive load - cosphi >0.8 for up to 300,000 operations.
Inductive loads at cosphi 0.25 approximately 50% load or 50% life time.

Cable lengths and cross sections:	
Max. motor cable length, screened/armoured cable	40 m
Max. motor cable length, unscreened/unarmoured cable	75 m
Max. motor cable length, screened/armoured cable and motor coil	100 m
Max. motor cable length, unscreened/unarmoured cable and motor coil	200 m
Max. motor cable length, screened/armoured cable and RFI/1B filter	200 V, 100 m
Max. motor cable length, screened/armoured cable and RFI/1B filter	400 V, 25 m
Max. motor cable length, screened/armoured cable and RFI 1B/LC filter	400 V, 25 m

Max. cross section to motor, see next section.

Max. cross section to control wires, rigid wire	1.5 mm^2/16 AWG (2 x 0.75 mm^2)
Max. cross section to control cables, flexible cable	1 mm^2/18 AWG
Max. cross section to control cables, cable with enclosed core	0.5 mm^2/20 AWG

When complying with EN 55011 1A and EN 55011 1B the motor cable must in certain instances be reduced. See EMC emission.

Control characteristics:	
Frequency range	0.2 - 132 Hz, 1 - 1000 Hz
Resolution of output frequency	0.013 Hz, 0.2 - 1000 Hz
Repeat accuracy of *Precise start/stop*(terminals 18, 19)	± 0.5 msec
System response time (terminals 18, 19, 27, 29, 33)	26.6 msec
Speed control range (open loop)	1:10 of synchronous speed
Speed control range (closed loop)	1:120 of synchronous speed
Speed accuracy (open loop)	150 - 3600 rpm: Max. error of ±23 rpm
Speed accuracy (closed loop)	30 - 3600 rpm: Max. error of ±7.5 rpm

All control characteristics are based on a 4-pole asynchronous motor

Surroundings:	
Enclosure	IP 20
Enclosure with options	NEMA 1
Vibration test	0.7 g
Max. relative humidity	5% - 93% during operation
Ambient temperature	Max. 45 °C (24-hour average max. 40 °C)

Derating for high ambient temperature, see special conditions in the Design Guide

Min. ambient temperature during full-scale operation	0 °C
Min. ambient temperature at reduced performance	- 10 °C
Temperature during storage/transport	-25 - +65/70 °C
Max. altitude above sea level	1000 m

Derating for high air pressure, see special conditions in the Design Guide

EMC standards, Emission	EN 61081-2, EN 61800-3, EN 55011
	EN 50082-1/2, EN 61000-4-2, EN 61000-4-3, EN 61000-4-4, EN 61000-4-5, EN
EMC standards, Immunity	61000-4-6, EN 61800-3

See section on special conditions in the Design Guide

Safeguards:

- Electronic thermal motor protection against overload.
- Temperature monitoring of the power module ensures that the frequency converter cuts out if the temperature reaches 100 °C. An overload temperature cannot be reset until the temperature of the power module is below 70 °C.
- The frequency converter is protected against short-circuits on motor terminals U, V, W.
- If a mains phase is missing, the frequency converter will cut out.
- Monitoring of the intermediate circuit voltage ensures that the frequency converter cuts out if the intermediate circuit voltage is too low or too high.
- The frequency converter is protected against earth fault on motor terminals U, V, W.

■ Technical data, mains supply 1 x 220 - 240 V/3 x 200-240V

According to . international standards	Type	2803	2805	2807	2811	2815	2822	2822 PD2	2840	2840 PD2
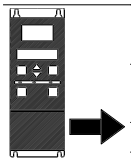 Output current (3 x 200-240V)	$I_{INV.}$ [A]	2.2	3.2	4.2	6.0	6.8	9.6	9.6	16	16
	I_{MAX} (60s) [A]	3.5	5.1	6.7	9.6	10.8	15.3	10.6	25.6	17.6
Output power (230 V)	$S_{INV.}$ [KVA]	0.9	1.3	1.7	2.4	2.7	3.8	3.8	6.4	6.4
Typical shaft output	$P_{M,N}$ [kW]	0.37	0.55	0.75	1.1	1.5	2.2	2.2	3.7	3.7
Typical shaft output	$P_{M,N}$ [HP]	0.5	0.75	1.0	1.5	2.0	3.0	3.0	5.0	5.0
Max. cable cross section, motor	[mm^2/AWG] [1)]	4/10	4/10	4/10	4/10	4/10	4/10	4/10	4/10	16/6
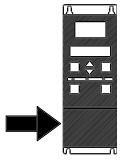 Input current (1 x 220-240 V)	$I_{L,N}$ [A]	5.9	8.3	10.6	14.5	15.2	-	22.0	-	31.0
	$I_{L,MAX}$ (60s) [A]	9.4	13.3	16.7	23.2	24.3	-	24.3	-	34.5
Input current (3 x 200-240 V)	$I_{L,N}$ [A]	2.9	4.0	5.1	7.0	7.6	8.8	8.8	14.7	14.7
	$I_{L,MAX}$ (60s) [A]	4.6	6.4	8.2	11.2	12.2	14.1	9.7	23.5	16.2
Max. cable cross section, power	[mm^2/AWG] [1)]	4/10	4/10	4/10	4/10	4/10	4/10	4/10	4/10	16/6
Max. pre-fuses	IEC/UL[2)] [A]	20/20	20/20	20/20	20/20	20/20	20/20	35/35	25/25	50/50
Efficiency[3)]	[%]	95	95	95	95	95	95	95	95	95
Power loss at 100% load	[W]	24	35	48	69	94	125	125	231	231
Weight	[kg]	2.0	2.0	2.0	2.0	2.0	3,7	6.0	6.0	18.50
Enclosure[4]	type	IP 20	IP 20	IP 20	IP 20	IP 20	IP 20	IP 20	IP 20	IP 20/ NEMA 1

1. American Wire Gauge. Max. cable cross section is the largest cable cross section that can be attached to the terminals. Always observe national and local regulations.

2. Type gG pre-fuses must be used for installation according to IEC rules. If you want to maintain UL/cUL you must use pre-fuses of the type Bussmann KTN-R 200 V, KTS-R 500 V or Ferraz Shawmut, type ATMR (max. 30A). The fuses must be placed for protection in a circuit that is capable of supplying a maximum of 100,000 amps RMS (symmetrical), 500 V maximum.

3. Measured using a 25 m screened/armoured motor cable with a rated load and rated frequency.

4. IP20 is standard for VLT 2805-2875, whereas NEMA 1 is an option.

■ Technical data, mains supply 3 x 380 - 480 V

According to international standards	Type	2805	2807	2811	2815	2822	2830
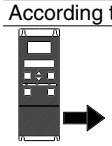 Output current	$I_{INV.}$ [A]	1.7	2.1	3.0	3.7	5.2	7.0
(3 x 380-480V)	I_{MAX} (60s) [A]	2.7	3.3	4.8	5.9	8.3	11.2
Output power (400 V)	$S_{INV.}$ [KVA]	1.1	1.7	2.0	2.6	3.6	4.8
Typical shaft output	$P_{M,N}$ [kW]	0.55	0.75	1.1	1.5	2.2	3.0
Typical shaft output	$P_{M,N}$ [HP]	0.75	1.0	1.5	2.0	3.0	4.0
Max. cable cross section, motor	[mm²/AWG] [1]	4/10	4/10	4/10	4/10	4/10	4/10
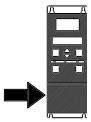 Input current	$I_{L,N}$ [A]	1.6	1.9	2.6	3.2	4.7	6.1
(3 x 380-480 V)	$I_{L,MAX}$(60s)[A]	2.6	3.0	4.2	5.1	7.5	9.8
Max. cable cross section, power	[mm²/AWG] [1]	4/10	4/10	4/10	4/10	4/10	4/10
Max. pre-fuses	IEC/UL[2] [A]	20/20	20/20	20/20	20/20	20/20	20/20
Efficiency[3]	[%]	96	96	96	96	96	96
Power loss at 100% load	[W]	28	38	55	75	110	150
Weight	[kg]	2.1	2.1	2.1	2.1	3.7	3.7
Enclosure[4]	type	IP 20	IP 20	IP 20	IP 20	IP 20	IP 20

According to international standards	Type	2840	2855	2875	2880	2881	2882
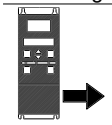 Output current	$I_{INV.}$ [A]	9.1	12	16	24	32.0	37.5
(3 x 380-480V)	I_{MAX} (60s) [A]	14.5	19.2	25.6	38.4	51.2	60.0
Output power (400 V)	$S_{INV.}$ [KVA]	6.3	8.3	11.1	16.6	22.2	26.0
Typical shaft output	$P_{M,N}$ [kW]	4.0	5.5	7.5	11.0	15.0	18.5
Typical shaft output	$P_{M,N}$ [HP]	5.0	7.5	10.0	15.0	20.0	25.0
Max. cable cross section, motor	[mm²/AWG] [1]	4/10	4/10	4/10	16/6	16/6	16/6
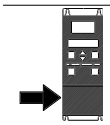 Input current	$I_{L,N}$ [A]	8.1	10.6	14.9	24.0	32.0	37.5
(3 x 380-480 V)	$I_{L,MAX}$(60s)[A]	13.0	17.0	23.8	38.4	51.2	60
Max. cable cross section, power	[mm²/AWG] [1]	4/10	4/10	4/10	16/6	16/6	16/6
Max. pre-fuses	IEC/UL[2] [A]	20/20	25/25	25/25	50/50	50/50	50/50
Efficiency[3]	[%]	96	96	96	97	97	97
Power loss at 100% load	[W]	200	275	372	412	562	693
Weight	[kg]	3.7	6.0	6.0	18.5	18.5	18.5
Enclosure[4]	type	IP20	IP20	IP20	IP20/ NEMA 1	IP20/ NEMA 1	IP20/ NEMA 1

1. American Wire Gauge. Max. cable cross section is the largest cable cross section that can be attached to the terminals. Always observe national and local regulations.

2. Type gG pre-fuses must be used for installation according to IEC rules. If you want to maintain UL/cUL you must use pre-fuses of the type Bussmann KTN-R 200 V, KTS-R 500 V or Ferraz Shawmut, type ATMR (max. 30A). The fuses must be placed for protection in a circuit that is capable of supplying a maximum of 100,000 amps RMS (symmetrical), 500 V maximum. See table under *Pre-fuses*.

3. Measured using a 25 m screened/armoured motor cable with a rated load and rated frequency.

4. IP20 is standard for VLT 2805-2875, whereas NEMA 1 is an option.

Available literature

Supplied with the unit

Below is a list of the literature available for VLT 2800.
It must be noted that there may be deviations from one country to the next.

Supplied with the unit:	
Operating Instructions	MG.27.AX.YY

Various literature for VLT 2800:	
Design Guide	MG.27.EX.YY
Data sheet	MD.27.AX.YY

Instructions for VLT 2800:	
LCP remote-mounting kit	MI.56.AX.51
Filter instruction	MI.28.B1.02
VLT 2800 DeviceNet cable	MI.28.F1.02
Cold plate	MI.28.D1.02
Precise stop	MI.28.C1.02

Communication with VLT 2800:	
Profibus manual	MG.90.AX.YY
VLT 2800 DeviceNet manual	MG.90.BX.YY

X = version number
YY = language version

Parameter list with factory settings

PNU #	Parameterdescription	Factory setting	4-setup	Conv. index	Data type
001	Language	English	No	0	5
002	Local/remote operation	Remote-controlled	Yes	0	5
003	Local reference	000,000.000	Yes	-3	4
004	Active Setup	Setup 1	No	0	5
005	Programming Setup	Active Setup	No	0	5
006	Setup copying	No copying	No	0	5
007	LCP copy	No copying	No	0	5
008	Display scaling	1.00	Yes	-2	6
009	Large display readout	Frequency [Hz]	Yes	0	5
010	Small display line 1.1	Reference [%]	Yes	0	5
011	Small display line 1.2	Motor current [A]	Yes	0	5
012	Small display line 1.3	Power [kW]	Yes	0	5
013	Local control	Remote control as par. 100	Yes	0	5
014	Local stop/reset	Active	Yes	0	5
015	Local jog	Not active	Yes	0	5
016	Local reversing	Not active	Yes	0	5
017	Local reset of trip	Active	Yes	0	5
018	Data change lock	Not locked	Yes	0	5
019	Operating status at power up	Forced stop, use saved ref.	Yes	0	5
020	Lock for Hand mode	Active	No	0	5
024	User-defined Quick Menu	Not active	No	0	5
025	Quick Menu Setup	000	No	0	6

4-Setup:
'Yes' means that the parameter can be programmed individually in each of the four Setups, i.e. one single parameter can have four different data values. 'No' means that the data value will be the same in all Set-ups.

Conversion index:
This number refers to a conversion figure to be used when writing or reading via serial communication with a frequency converter.
See *Data character* in *Serial communication* in the *VLT 2800 Design Guide.*

Data type:
Data type shows the type and length of the telegram.

Data type	Description
3	Integer 16
4	Integer 32
5	Unsigned 8
6	Unsigned 16
7	Unsigned 32
9	Text string

PNU #	Parameter-description	Factory setting	4-setup	Conv. index	Data-type
100	Configuration	Speed reg., open loop	Yes	0	5
101	Torque characteristics	Constant torque	Yes	0	5
102	Motor power $P_{M,N}$	depends on unit	Yes	1	6
103	Motor voltage $U_{M,N}$	depends on unit	Yes	-2	6
104	Motor frequency $f_{M,N}$	50 Hz	Yes	-1	6
105	Motor current $I_{M,N}$	depends on motor selected	Yes	-2	7
106	Rated motor speed	depends on par. 102	Yes	0	6
107	Automatic motor adjustment	Optimisation off	Yes	0	5
108	Stator resistance R_S	depends on motor selected	Yes	-3	7
109	Stator reactance X_S	depends on motor selected	Yes	-2	7
117	Resonance damping	OFF	Yes	0	6
119	High start torque	0.0 sec	Yes	-1	5
120	Start delay	0.0 sec	Yes	-1	5
121	Start function	Coast in start del.	Yes	0	5
122	Function at stop	Coast	Yes	0	5
123	Min. freq. for activation of par. 122	0.1 Hz	Yes	-1	5
126	DC braking time	10 sec.	Yes	-1	6
127	DC brake engaging frequency	OFF	Yes	-1	6
128	Thermal motor protection	No protection	Yes	0	5
130	Start frequency	0.0 Hz	Yes	-1	5
131	Voltage at start	0.0 V	Yes	-1	6
132	DC brake voltage	0%	Yes	0	5
133	Start voltage	depends on unit	Yes	-2	6
134	Load compensation	100 %	Yes	-1	6
135	U/f-ratio	depends on unit	Yes	-2	6
136	Slip compensation	100 %	Yes	-1	3
137	DC hold voltage	0%	Yes	0	5
138	Brake cut out value	3.0 Hz	Yes	-1	6
139	Brake cut in frequency	3.0 Hz	Yes	-1	6
140	Current, minimum value	0%	Yes	0	5
142	Leak reactance	depends on motor selected	Yes	-3	7
143	Internal ventilator control	Automatic	Yes	0	5
144	AC brake factor	1.30	Yes	-2	5
146	Reset voltage vector	Off	Yes	0	5

Factory Settings

PNU #	Parameter description	Factory setting	Changes during operation	4-setup	Conv. index	Data type
200	Output frequency range	Clockwise only, 0-132 Hz	No	Yes	0	5
201	Output frequency, low limit f_{MIN}	0.0 Hz	Yes	Yes	-1	6
202	Output frequency, high limit f_{MAX}	132 Hz	Yes	Yes	-1	6
203	Reference range	Min ref.-Max ref.	Yes	Yes	0	5
204	Minimum ref Ref_{MIN}	0.000 Hz	Yes	Yes	-3	4
205	Maximum ref Ref_{MAX}	50.000 Hz	Yes	Yes	-3	4
206	Ramp type	Linear	Yes	Yes	0	5
207	Ramp-up time 1	3.00 sec.	Yes	Yes	-2	7
208	Ramp-down time 1	3.00 sec.	Yes	Yes	-2	7
209	Ramp-up time 2	3.00 sec.	Yes	Yes	-2	7
210	Ramp-down time 2	3.00 sec.	Yes	Yes	-2	7
211	Jog ramp time	3.00 sec.	Yes	Yes	-2	7
212	Quick stop ramp-down time	3.00 sec.	Yes	Yes	-2	7
213	Jog frequency	10.0 Hz	Yes	Yes	-1	6
214	Reference function	Sum	Yes	Yes	0	5
215	Preset reference 1	0.00%	Yes	Yes	-2	3
216	Preset reference 2	0.00%	Yes	Yes	-2	3
217	Preset reference 3	0.00%	Yes	Yes	-2	3
218	Preset reference 4	0.00%	Yes	Yes	-2	3
219	Catch up/slow down reference	0.00%	Yes	Yes	-2	6
221	Current limit	160 %	Yes	Yes	-1	6
223	Warn. Low current	0.0 A	Yes	Yes	-1	6
224	Warn. High current	I_{MAX}	Yes	Yes	-1	6
225	Warn. Low frequency	0.0 Hz	Yes	Yes	-1	6
226	Warn. High frequency	132.0 Hz	Yes	Yes	-1	6
227	Warn. Low Feedback	-4000.000	Yes	Yes	-3	4
228	Warn. High Feedback	4000.000	Yes	Yes	-3	4
229	Frequency bypass, bandwidth	0 Hz (OFF)	Yes	Yes	0	6
230	Frequency bypass 1	0.0 Hz	Yes	Yes	-1	6
231	Frequency bypass 2	0.0 Hz	Yes	Yes	-1	6

PNU #	Parameterdescription	Factory setting	4-setup	Conv. index	Data type
302	Digital input, term. 18	Start	Yes	0	5
303	Digital input, term. 19	Reversing	Yes	0	5
304	Digital input, term. 27	Reset and coast inverse	Yes	0	5
305	Digital input, term. 29	Jog	Yes	0	5
307	Digital input, term. 33	No function	Yes	0	5
308	Term. 53, analogue input voltage	Reference	Yes	0	5
309	Term. 53, min scaling	0.0 V	Yes	-1	6
310	Term. 53, max scaling	10.0 V	Yes	-1	6
314	Term. 60, analogue input current	No function	Yes	0	5
315	Term. 60, min scaling	0.0 mA	Yes	-4	6
316	Term. 60, max scaling	20.0 mA	Yes	-4	6
317	Time out	10 sec.	Yes	-1	5
318	Function after timeout	No function	Yes	0	5
319	Term. 42, analogue output	0-I_{MAX} = 0-20 mA	Yes	0	5
323	Relay output	Control ready	Yes	0	5
327	Pulse ref./FB	5000 Hz	Yes	0	7
341	Term. 46 digital output	Control ready	Yes	0	5
342	Term. 46 Max. pulse output	5000 Hz	Yes	0	6
343	Precise stop function	Normal ramp stop	Yes	0	5
344	Counter value	100000 pulses	Yes	0	7
349	Speed comp delay	10 ms	Yes	-3	6

4-Setup:
'Yes' means that the parameter can be programmed individually in each of the four Setups, i.e. one single parameter can have four different data values. 'No' means that the data value will be the same in all Setups.

Conversion index:
This number refers to a conversion figure to be used when writing or reading via serial communication with a frequency converter.
See *Data character* in *Serial communication* in the *VLT 2800 Design Guide.*

Data type:
Data type shows the type and length of the telegram.

Data type	Description
3	Integer 16
4	Integer 32
5	Unsigned 8
6	Unsigned 16
7	Unsigned 32
9	Text string

PNU #	Parameter description	Factory setting	4-setup	Conv. index	Data type
400	Brake function	Depends on unit type	No	0	5
405	Reset function	Manual reset	Yes	0	5
406	Aut. restart time	5 sec.	Yes	0	5
409	Trip delay overcurrent	Off (61 sec.)	Yes	0	5
411	Switching frequency	4.5 kHz	Yes	0	6
412	Var. carrier frequency	No LC-filter	Yes	0	5
413	Overmodulation function	On	Yes	0	5
414	Min. feedback	0.000	Yes	-3	4
415	Max. feedback	1500.000	Yes	-3	4
416	Process units	No unit	Yes	0	5
417	Speed PID propor.ampl.	0.010	Yes	-3	6
418	Speed PID intergra.	100 ms	Yes	-5	7
419	Speed PID differentiation time	20.00 ms	Yes	-5	7
420	Speed PID diff. amplification limit	5.0	Yes	-1	6
421	Speed PID lowpass filter	20 ms	Yes	-3	6
423	U1 voltage	par. 103	Yes	-1	6
424	F1 frequency	Par. 104	Yes	-1	6
425	U2 voltage	par. 103	Yes	-1	6
426	F2 frequency	par. 104	Yes	-1	6
427	U3 voltage	par. 103	Yes	-1	6
428	F3 frequency	par. 104	Yes	-1	6
437	Proc. PID no/inv.	Normal	Yes	0	5
438	Proc. PID anti wind.	Active	Yes	0	5
439	Proc. PID start frequency	Par. 201	Yes	-1	6
440	Proc. PID start proportional ampl.	0.01	Yes	-2	6
441	Proc. PID integration time	Off (9999.99 s)	Yes	-2	7
442	Proc. PID differentiation time	Off (0.00 s).	Yes	-2	6
443	Proc. PID diff. ampl. limit	5.0	Yes	-1	6
444	Proc. PID lowpass filter time	0.02 s	Yes	-2	6
445	Flying start	Not possible	Yes	0	5
451	Speed PID feedforward factor	100%	Yes	0	6
452	Controller range	10 %	Yes	-1	6
456	Brake voltage reduce	0	Yes	0	5
457	Phase loss function	Trip			
461	Feedback conversion	Linear	Yes	0	5
462	Enhanced sleep mode timer	Off			
463	Boost setpoint	100%			
464	Wakeup pressure	0			
465	Minimum pump frequency	20			
466	Maximum pump frequency	50			
467	Minimum pump power	0 W			
468	Maximum pump power	0 W			
469	No flow power compensation	1.2			
470	Dry run time out	Off			
471	Dry run interlock timer	30 min.			
484	Initial ramp	Off			
485	Fill rate	Off			
486	Filled setpoint	Parameter 414			

PNU #	Parameterdescription	Factory setting	4-setup	Conv. index	Data type
500	Address	1	No	0	5
501	Baudrate	9600 Baud	No	0	5
502	Coasting stop	Logic or	Yes	0	5
503	Quick stop	Logic or	Yes	0	5
504	DC brake	Logic or	Yes	0	5
505	Start	Logic or	Yes	0	5
506	Reversing	Logic or	Yes	0	5
507	Selection of Setup	Logic or	Yes	0	5
508	Selection of preset ref.	Logic or	Yes	0	5
509	Bus jog 1	10.0 Hz	Yes	-1	6
510	Bus jog 2	10.0 Hz	Yes	-1	6
512	Telegram profile	FC protocol	Yes	0	5
513	Bus time interval	1 sec.	Yes	0	5
514	Bus time interval function	Off	Yes	0	5
515	Data readout: Reference %		No	-1	3
516	Data readout: Reference [unit]		No	-3	4
517	Data readout: Feedback [unit]		No	-3	4
518	Data readout: Frequency		No	-1	3
519	Data readout: Frequency x scaling		No	-1	3
520	Data readout: Motor current		No	-2	7
521	Data readout: Torque		No	-1	3
522	Data readout: Power [kW]		No	1	7
523	Data readout: Power [HP]		No	-2	7
524	Data readout: Motor voltage [V]		No	-1	6
525	Data readout: DC Link voltage		No	0	6
526	Data readout: Motor thermal load		No	0	5
527	Data readout: Inverter thermal load		No	0	5
528	Data readout: Digital input		No	0	5
529	Data readout: Analogue input, term. 53		No	-1	5
531	Data readout: Analogue input, term. 60		No	-4	5
532	Data readout: Pulse reference		No	-1	7
533	Data readout: External reference		No	-1	6
534	Data readout: Status word		No	0	6
535	Data readout: Bus feedback 1		No	0	3
537	Data readout: Inverter temperature		No	0	5
538	Data readout: Alarm word		No	0	7
539	Data readout: Control word		No	0	6
540	Data readout: Warning word		No	0	7
541	Data readout: Extended status word		No	0	7
544	Data readout: Pulse count		No	0	7

PNU #	Parameterdescription	Factory setting	4-setup	Conv. index	Data type
600	Operating hours		No	73	7
601	Hours run		No	73	7
602	kWh counter		No	2	7
603	Number of cut ins		No	0	6
604	Number of overtemperatures		No	0	6
605	Number of overvoltages		No	0	6
615	Fault log: Error code		No	0	5
616	Fault log: Time		No	0	7
617	Fault log: Value		No	0	3
618	Reset of kWh counter	No reset	No	0	7
619	Reset of running hours counter	No reset	No	0	5
620	Operation mode	Normal operation	No	0	5
621	Nameplate: Unit type		No	0	9
624	Nameplate: Software version		No	0	9
625	Nameplate: LCP identification no.		No	0	9
626	Nameplate: Database identification no.		No	-2	9
627	Nameplate: Power parts version		No	0	9
628	Nameplate: Application option type		No	0	9
630	Nameplate: Communication option type		No	0	9
632	Nameplate: BMC software identification		No	0	9
634	Nameplate: Unit identification for communication		No	0	9
635	Nameplate: Software parts no.		No	0	9
640	Software version		No	-2	6
641	BMC software identification		No	-2	6
642	Power card identification		No	-2	6
678	Configure control card				
700-	Used for wobble function, please see MI28J2xx				

4-Setup:

'Yes' means that the parameter can be programmed individually in each of the four Setups, i.e. one single parameter can have four different data values. No' means that the data value will be the same in all Set-ups.

Conversion index:

This number refers to a conversion figure to be used when writing or reading via serial communication with a frequency converter.

See *Data character* in *Serial communication* in the *VLT 2800 Design Guide.*

Data type:

Data type shows the type and length of the telegram.

Data type	Description
3	Integer 16
4	Integer 32
5	Unsigned 8
6	Unsigned 16
7	Unsigned 32
9	Text string

Index

A

AC brake 44
Active Setup 11
Aggressive environments 82
Analogue input 38
Analogue output 40
Automatic motor tuning 9
Automatic motor tuning 20

B

Brake connection 70
Brake cut in frequency 26
Brake cut out value 26
Brake function 44
Brake Voltage Reduce 51

C

Catch up 32
CHANGE DATA 7
Connection of a 2-wire transmitter 74
Constant torque 18
Control cables 73
Control cables 72
Control keys 7
control panel 7
Control terminals 71
Control unit 7
Counter value 43
Current limit, 32
Current, minimum value 26

D

DC brake time 23
DC brake voltage 25
DC hold voltage 26
Derating for ambient temperature 82
Derating for high switching frequency 83
Digital / pulse output 42
Digital inputs 35
Dimensions 58
Direction of motor rotation 68
Display 7
Display mode 8
Display readout 8
Display readout 77
Display scaling of output frequency 12

E

Earth connection 70
Earthing 63
Electrical installation 65
Electrical installation, control cables 72
EMC emission 84
EMC-correct electrical installation 64
ETR - Electronic Thermal Relay 24
Extra protection 63

F

Fan control 27
Feedback conversion 52
Feedback, 45
Flying start 50
Four Setups 11
Frequence bypass, bandwidth 34
Function at stop 23

G

Gain AC brake 27
Galvanic Isolation (PELV) 83

H

Hand Auto 8
Hand operation 16
High voltage test 63
High voltage warning 6
High voltage warning 63

I

Integration 62
IT mains 68

J

Jog frequency 31
Jog ramp time 30

L

Language 10
Large display readout 12
LCP copy 11
Leakage reactance 26
Literature 92
Load compensation 25
Load sharing 71
Local reference 10
Lock for data changes 16

M

Mains connection 67
Mains supply 90
Manual initialisation 7
Maximum Pulse 29 42
Mechanical brake 71
Mechanical installation 62
Menu mode 8
Menu mode 8
Motor cables 69
Motor coils 59
Motor connection 68
Motor current 19
Motor frequency 19
Motor power 19
Motor thermal protection 70
Motor voltage 19

O

Operating mode at power-up, local operation 16
Order form 75
Output frequency 28
Overmodulation function 45

P

Parallel connection of motors 69
Parameter list with factory settings 93
Phase loss function 52
Potentiometer reference 74
Precise stop function 43
Pre-fuses 67
Preset reference 31
Process control, closed loop 18
Process PID 48
Process units 46
Programming Setup 11
Pulse reference/feedback 42
Pulse start/stop 74

Q

Quick menu 8
Quick menu 8
QUICK MENU 7
Quick Menu setup 17
Quick menu, userdefined 16
Quick-stop ramp-down time 31

R

Ramp type 29
Ramp-down time 30
Ramp-up time 30
Rated motor speed 19
RCD 70
RCD relays 63
Reference function 31
Reference, 29
Relative 31
Relay connection 73
Relay output 1-3 40
Reset function 44
Reset voltage vector 27
Resonance damping 21
reversing 36
RFI 1B filter 59
RFI switch 68

S

Setup copying 11
Side-by-side 62
Slip compensation 26
Slow down 32
Software Dialog 73
Spacing for mechanical installation 62
Special motor mode 18
Speed comp delay 43
Speed control, closed loop 18
Speed control, open loop 18
Speed PID 46
Speed up/down 74
Square root 52
Start 50
Start delay 22
Start frequency 24
Start function 22
Start torque 22
Start voltage 25
Start/stop 74
Stator reactance 21
Stator resistance 20
STOP/RESET 7
Sub D plug 73
Sum 31
Switches 1-4 73
Switching frequency 45

T

Temperature-dependent switch frequency 83
Terminal 42 40
Terminal 46 42
Terminal 53 38
Terminal 60 38
Terminal cover 59
Terminals 74
Thermal motor protection 23
Thermistor 24
Thermistor 37
Tightening Torque, Power Terminals 71
Time out 39
Torque characteristic 18

U

U/f-ratio 25
UL Standard 84

V

Variable torque 18

W

Warning 52
Warning functions 32
Warning words, extended status words and Alarmwords 81
Warnings/alarm messages 77



www.danfoss.com/drives

Danfoss can accept no responsibility for possible errors in catalogues, brochures and other printed material. Danfoss reserves the right to alter its products without notice. This also applies to products already on order provided that such alterations can be made without subsequential changes being necessary in specifications already agreed.
All trademarks in this material are property of the respective companies. Danfoss and the Danfoss logotype are trademarks of Danfoss A/S. All rights reserved.

195R0027 MG27A202 Rev. 2006-12-08

* M G 2 7 A 2 0 2 *